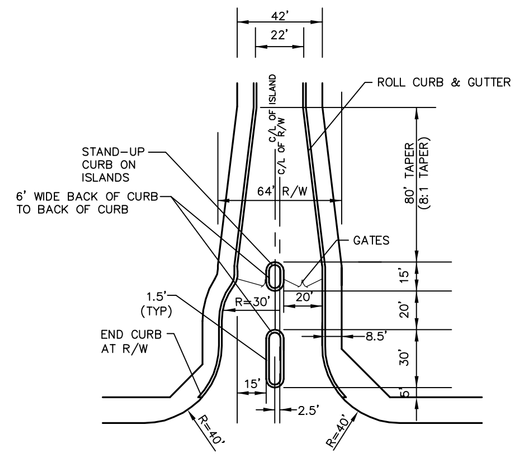

ENTRANCE DETAIL

NOTE:
CURB & GUTTER WIDTH NOT INCLUDED IN PAVEMENT DIMENSIONS.

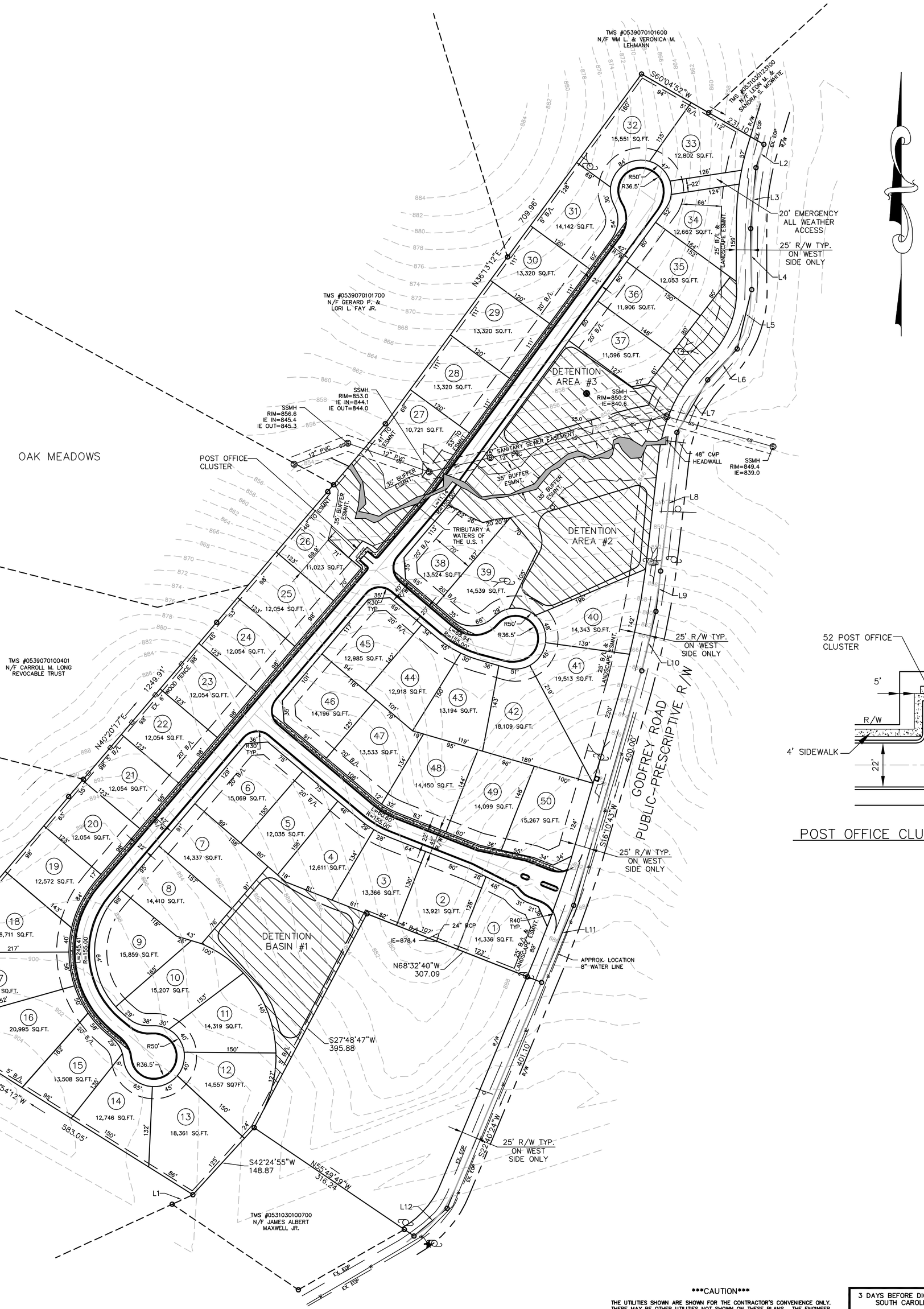

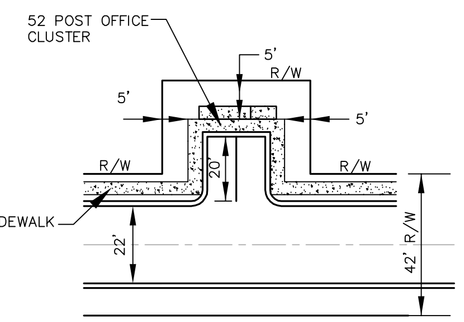

POST OFFICE CLUSTER AND PARKING DETAIL

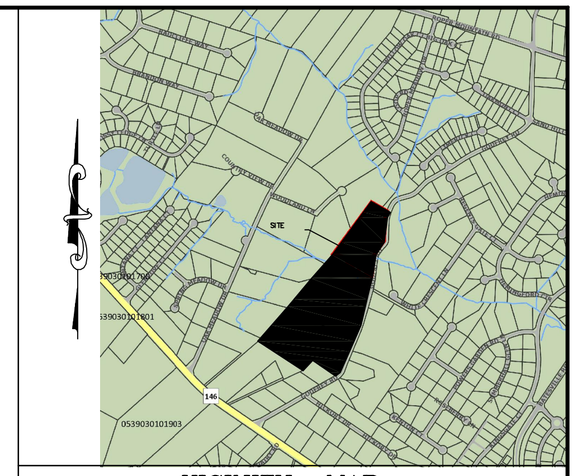

VICINITY MAP

ZONING – RS	PROPOSED FRD
Density Shown:	2.09 Units/AC
Lots Shown:	50 Lots
Total AC. Residential Tracts	20.17 Acres
Total Common Area/Green Space Shown	3.68 Acres
Total Site Area:	±23.85 Acres

GENERAL NOTES:

1. All street lights location and number to be determined by Duke Power.
2. All project signage to meet Greenville County Requirements.
3. Stormwater and Erosion Control Plan to be approved by Greenville County Land Development Department.
4. TMS# 0531030100800 and 0531020100801
5. Setbacks:
   Front= 20' Interior Lots
   Front= 25' Along Godfrey Road
   Side= 5'
   Rear= 5'
6. No vehicular access to Godfrey Road from Lots 1, 33–37, 40, 41 and 50
7. Common Area Legend:
8. Custom Homes will be designed to fit individual lots.

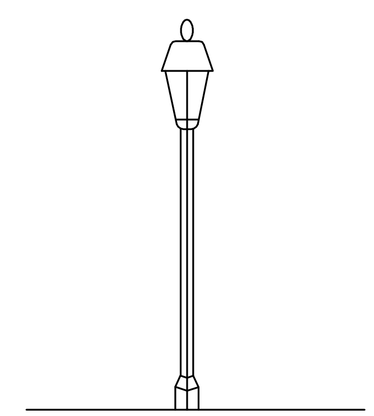

NOTE:
LIGHTS TO BE 150 WATT HPS, 12'–16' MOUNTING HEIGHT. LOCATION OF LIGHTS TO BE DETERMINED BY DEVELOPER AND DUKE POWER.

LIGHT DETAIL

CAUTION

THE UTILITIES SHOWN ARE SHOWN FOR THE CONTRACTOR'S CONVENIENCE ONLY. THERE MAY BE OTHER UTILITIES NOT SHOWN ON THESE PLANS. THE ENGINEER ASSUMES NO RESPONSIBILITY FOR THE LOCATIONS SHOWN AND IT SHALL BE THE CONTRACTOR'S RESPONSIBILITY TO VERIFY THE LOCATIONS OF ALL UTILITIES WITHIN THE LIMITS OF THE WORK. ALL DAMAGE MADE TO EXISTING UTILITIES BY THE CONTRACTOR SHALL BE THE SOLE RESPONSIBILITY OF THE CONTRACTOR.

3 DAYS BEFORE DIGGING IN SOUTH CAROLINA
CALL SC
811
PALMETTO UTILITY LOCATION SERVICE

GODFREY RIDGE

FINAL DEVELOPMENT PLAN

NO.	DATE	REVISIONS	CKD. BY
1	10–3–16	ADD EMERGENCY ACCESS & REV LOT 33 & 34	RLF / EKN
2	10–5–16	REV LOTS 10, 11 AND 39	RLF / EKN
3			
4			
5			
6			

16084-FDP-PP-10-5-16.DWG

FRF FANT REICHERT & FOGLEMAN, INC.
ENGINEERING & SURVEYING
25 WOODS LAKE ROAD
SUITE 705
GREENVILLE, SC 29607
PH: (864) 271-8633

SCALE: 1" = 100' | DATE: 8-4-16 | PROJECT NO. 16084
DWG. #: 1 OF 1 | DWN: RLF | DES: EKN

P:\Land Projects 2\16084\dwg\16084-FDP-PP-10-5-16.dwg, 10/6/2016 8:40:17 AM, PDF Complete