COUNTY OF GREENVILLE
MERRIFIELD PARK
DRAINAGE IMPROVEMENT PROJECT
IFB#28-11/24/16

Greenville County

DEPARTMENT OF GENERAL SERVICES
PROCUREMENT SERVICES DIVISION
GREENVILLE COUNTY SQUARE
301 UNIVERSITY RIDGE, SUITE 100
GREENVILLE, SOUTH CAROLINA 29601
www.greenvillecounty.org
Phone: 864-467-7200

Greenville County

GREENVILLE COUNTY COUNCIL
PROCUREMENT SERVICES DIVISION
GREENVILLE COUNTY SQUARE
301 UNIVERSITY RIDGE, SUITE 100
GREENVILLE, SOUTH CAROLINA 29601-3660

NOTICE

Date October 28, 2016

Sealed bids for providing MERRIFIELD PARK DRAINAGE IMPROVEMENT PROJECT subject to the conditions and all provisions set forth herein and attached, will be received at this office until 3:00 P.M., E.S.T., NOVEMBER 24, 2016, then publicly opened. The commodities and/or services must be furnished as described and specified to Greenville County.

SHOW THIS NUMBER ON ENVELOPE

IFB No. #28-11/24/16

PROCUREMENT SERVICES DIVISION

By _____

Director

	COMMODITIES OR SERVICES	
	GREENVILLE COUNTY IS REQUESTING SUBMISSION OF SEALED BIDS FROM VENDORS TO PROVIDE THE DRAINAGE IMPROVEMENTS IN THE MERRIFIELD PARK SUBDIVISION. BIDS MUST BE SUBMITTED ON THE BID FORM (PAGES 27 - 29) WITH THE TOTAL BEING LISTED AT THE BOTTOM. PLEASE SUBMIT ONE (1) ORIGINAL AND THREE (3) COPIES OF YOUR BID. A PRE-BID MEETING WILL BE HELD AT 1:00 P.M., E.S.T., NOVEMBER 15, 2016 IN THE PROCUREMENT SERVICES DIVISION, 301 UNIVERSITY RIDGE, SUITE 100, GREENVILLE, SC 29601. A SITE VISIT WILL BE HELD FOLLOWING THE MEETING. QUESTIONS CONCERNING THE IFB ARE TO BE SUBMITTED IN WRITING TO BOB BREWER, CPPO, CPPB, GREENVILLE COUNTY PROCUREMENT SERVICES DIVISION, SUITE 100, 301 UNIVERSITY RIDGE, GREENVILLE, SC 29601, BY FAX (864) 467-7304 OR EMAIL rbrewer@greenvillecounty.org NO LATER THAN 5:00 P.M., E.S.T. NOVEMBER 17, 2016. PLEASE SIGN THE FOLLOWING PAGE AND BID FORM (PAGES 27 - 30). FAILURE TO SIGN WILL VOID YOUR BID. ALL SIGNATURES MUST BE CLEARLY IDENTIFIABLE AS AN ORIGINAL. IF NOT, THEN YOUR RESPONSE WILL BE DISQUALIFIED. PLEASE MARK YOUR ENVELOPE TO READ: IFB #28-11/24/16.	

INSTRUCTIONS TO RESPONDENTS

IFB# 28-11/24/16 MERRIFIELD PARK DRAINAGE IMPROVEMENT PROJECT

1. Unless otherwise required, submit only one (1) original and three (3) copies of each RFI/RFQ/IFB/Proposals.
2. RFI/RFQ/IFB/Proposals, amendments thereto or withdrawal requests received after the time advertised for opening will be void regardless of when they were mailed.
3. Quote prices on units specified with packing included.
4. Attach complete specifications for and permitted substitutions offered, or when amplification is desirable or necessary.
5. If specifications or descriptive papers are submitted with RFI/RFQ/IFB/Proposals, enter respondents name thereon.
6. If the article bid upon has a trade name or brand, show same in the RFI/RFQ/IFB/proposal.
7. When required, furnish samples, free of expense, prior to opening of RFI/RFQ/IFB/Proposals. Label each sample with respondents name and the item number. Should you wish samples returned, at your expense, when not destroyed in tests, make request for return within 10 days following bid/proposal opening.
8. Show delivery time required after order is received (see below).
9. Address and mark bids/proposals as indicated in the notice.

CONDITIONS

1. The County Agency or Institution submitting this notice reserves the right to reject any and all RFI/RFQ/IFB/Proposals, and to waive all technicalities.
2. Unit prices will govern over extended prices, unless otherwise stated in notice.
3. Time in connection with discount offered will be computed from date of delivery of commodities to carrier, when inspecting and acceptance is at point of origin; or date of delivery at destination; or if laboratory inspection is made part of bid, from date of laboratory report.
4. In case of default of contractor, Greenville County reserves the right to purchase any or all items in default on open market, charging contractor with any excessive costs.
5. All materials and products offered must be guaranteed to meet the requirements of the specifications indicated, given or referred to.
6. Prices bid must be based upon payment in thirty (30) days. Discounts for payment in less than thirty (30) days will not be considered in making award.
7. The right is reserved, in case of tie bids, to make award considered to be most advantageous to Greenville County.
8. The right is reserved to reject any RFI/RFQ/IFB/Proposal in which the delivery time indicated is considered sufficient to delay the operation for which the commodity is intended.
9. Unless otherwise indicated by County Agency or Institution submitting this notice, prices must be firm.

RFI/RFQ/IFB/PROPOSAL

(DATE) _____

In compliance with invitation, and subject to all conditions, thereof, the undersigned offers and agrees, if this RFI/RFQ/IFB/Proposal is accepted within _____days from date of opening, furnish any or all items quoted on at prices as set forth after the item and unless otherwise specified, within _____ days after receipt of order, delivered, all transportation costs included,

Discount will be allowed as follows: 30 calendar days _____ %.

FIRM NAME _____ ADDRESS _____

BY_____ _____

(RFI/RFQ/IFB/PROPOSAL MUST BE SIGNED IN WRITING)

PRINT NAME_____ _____

TITLE_____ EMAIL: _____

PHONE_____ FAX_____

COUNTY OF GREENVILLE
MERRIFIELD PARK
DRAINAGE IMPROVEMENT PROJECT
IFB# 28-11/24/16

SCHEDULE

November 15, 2016	A **pre-bid meeting** will be held at **1:00 P.M., E.S.T.,** in the Greenville County Procurement Services Division, **301 University Ridge, Suite 100,** Greenville, SC 29601. **A site visit will follow the meeting.**
November 17, 2016	**All questions** must be submitted in writing to Bob Brewer, CPPB, Procurement Services Division, 301 University Ridge, Suite 100, Greenville, SC 29601, by Fax (864)467-7304, or by email rbrewer@greenvillecounty.org, by **5:00 P.M., E.S.T.**
November 24, 2016	**Bids** must be delivered to the Procurement Services Division, 301 University Ridge, Suite 100, Greenville, SC 29601 no later than **3:00 P.M. E.S.T**.
November 24 – December 1, 2016	**Review** of Bids
December 1, 2016	Tentative Date of **Award**
December 1 – 15, 2016	**Contract** Negotiations
December 15, 2016	Issue **Notice to Proceed**

INVITATION FOR BIDS
MERRIFIELD PARK
DRAINAGE IMPROVEMENT PROJECT
IFB# 28-11/24/16

Greenville County

I. Introduction

Greenville County is seeking sealed bids for storm drainage improvements to the Merrifield Park Subdivision off Hudson Road in Greenville County.

II. Scope of Work

The main purpose of the project is to improve the drainage system. The work consists of the replacement of existing lines and the installation of new storm drainage lines. Contractor shall be required to remove/recycle existing asphalt and place new asphalt pavement. The Contractor shall coordinate with utility companies prior to start of construction. The contractor shall submit detour plans and have the plans approved by the County prior to any road closing. The work will impact the following:

a) Roads in the subdivision and side streets.
b) Several private properties for the purposes of installing/upgrading the drainage system.
c) Utilities to be identified and coordinated by the contractor prior to start of work.
d) Contractor to follow all Greenville County and SCDOT requirements.
e) Contractor to ensure all proper notifications to county and citizens of road closure prior to closing a road.
f) Contractor is responsible for obtaining, maintaining and restoring the staging area.

This project includes, at minimum, the following:

- Contractor to notify each property owner prior to saw cutting driveway in order to move vehicles out.
- Demolition, removal and disposal of the existing drainage system, driveway aprons, curbs, trees, plant material, etc. as necessary to make room for the new drainage system and road improvements.
- Remove and re-install mail boxes.
- Installation of approximately 136 LF of 15" RCP, 544 LF of 18" RCP, 624 LF of 24"RCP, 1088 LF of 30" RCP, 48 LF of 42" RCP.
- Install 103 LF of (5'x3' Concrete Box Culvert), 50 LF of (7'x4' Concrete Box Culvert), 42 LF of (9'x4' Concrete Box Culvert) and associated Head Walls with wings.
- Install drainage structures (2) type 16, (18) type 17, (1) type 18 and (3) Yard/Drop Inlets.
- Install (7) Drainage Access Manholes (SCDOT)
- Removing/Recycling existing asphalt pavement, and adjusting driveways

- Replacements of existing concrete/asphalt driveways impacted by the project.
- Place asphalt surface in impacted areas and as directed by engineer.
- Remove & re-install sprinkler lines for each property. Contractor is responsible for ensuring each sprinkler system is working before start work and once work is completed.
- Installation and maintenance of erosion control measures to include perimeter control devices, inlet protection devices, sediment traps, erosion control blanket (ECB), temporary stone check dams, temporary mulching/grassing, and other measures for stabilization as needed.
- The contractor is responsible for permanent grassing/stabilization of all disturbed areas and removal of all sediment controls and accumulated sediment after permanent grassing is established to match each yard.
- Compaction testing, concrete testing, asphalt testing, construction staking, traffic control, erosion control, maintenance of temporary driveway entrances, etc. for the duration of the construction project are the responsibility of the contractor.
- Additional items included in the project are shown on the project plans.

III. Pricing

Pricing must be submitted on the Bid Forms, pages 27 - 30, with the total being listed at the bottom. Bid sheet must be signed or bid may be rejected.

IV. Bonding

Information on Bid Bonds, Performance and Payment Bonds is listed in the Instructions/Terms and Conditions (page 12).

V. Pre-Bid Meeting

A **pre-bid meeting** will be held at **1:00 P.M., E.S.T., November 15, 2016** at the Greenville County Procurement Services Division, **301 University Ridge, Suite 100, Greenville County, SC 29601**. A site visit will follow the meeting.

VI. Best Management Practices

Please refer to the erosion and sediment control plan for Best Management Practices (BMPs) to be installed on the project. The contractor is responsible for erosion control. A listing of the BMPs to be used on the site consists of the following:

Sediment Tubes. Sediment tubes shall be used to prevent sediment into the new system.

Grassing. Grassing of all disturbed areas on the project site has been specified with appropriate mixtures of various seed varieties based on the planting season. The contractor is to coordinate with each property owner about the grassing schedule.

VII. Project Duration

The contractor shall be allowed 120 calendar days for substantial completion of the project to include all demolition, storm drainage installation, roadway recycling, paving, fine grading, clean up and permanent grassing. Final punch list items, removal of erosion control devices and project close-out shall be accomplished within 15 days after substantial completion.

VIII. Submission Procedures, Requirements

A. Submittals

All submissions must be received by **3:00 P.M., E.S.T., THURSDAY, NOVEMBER 24, 2016** and delivered to Greenville County Procurement Services Division, 301 University Ridge, Suite 100, Greenville, South Carolina 29601. If the submission is late the bid will be rejected. There will be no exceptions. Responders submitting bids shall be responsible for all cost of preparing such bids.

Responders to this Invitation for Bids shall closely examine the specific requirements noted herein and the attached Terms and Conditions and submit one (1) unbound original and three (3) bound copies of their bid to the address listed below. To ensure acceptance of the bid, the Invitation for Bids number (IFB#28-11/24/16) should be clearly shown on the lower left corner of the return envelope. Facsimile transmittals or offers communicated by telephone will not be accepted or considered.

County of Greenville
Department of General Services
Procurement Services Division, Attn: Procurement Director
301 University Ridge, Suite 100
Greenville, South Carolina 29601-3665
IFB# 28-11/24/16

B. License and Permits

The contractor shall obtain all applicable licenses, and promptly pay all taxes required by the State of South Carolina, and/or Greenville County.

IX. Statement of Qualifications

Vendors shall provide the following with their response:

1. Overview of company background.
2. Staffing or organizational chart showing staff that will be used for this project.
3. Corporate/individual qualifications and experiences, including certifications.
4. Current resume(s) for individuals(s) assigned to this project.
5. List of at least three (3) references including names, addresses, and telephone numbers. Vendor should include any South Carolina governmental entity reference.

X. Inquiries and Addenda

A. Questions

All questions concerning this IFB are to be submitted in writing via fax, electronic mail, or regular mail to Bob Brewer, CPPB, Procurement Services Division, to the address listed below, no later than **5:00 P.M., E.S.T., NOVEMBER 17, 2016**. Please refer all questions in writing about this Invitation for Bids and project to:

County of Greenville
Bob Brewer, CPPO, CPPB
Procurement Services Division
301 University Ridge, Suite 100
Greenville, South Carolina 29601-3665
Phone: (864) 467-7206
Fax:(864) 467-7304
E-mail: rbrewer@greenvillecounty.org

All inquiries and responses will be distributed to all vendors known to have received the IFB document. The County will not be responsible for or bound by any oral instructions made by any employee(s) of the County in regard to this IFB.

B. Addenda

This IFB represents the most definite statement Greenville County will make concerning information upon which bids are to be based. Any changes to this IFB will be in the form of a written addendum, which will be furnished to all vendors who are listed with the County as having received an IFB document. No addenda will be issued later than five (5) working days prior to the date for receipt for bids except an addendum which, if necessary, postpones the date for receipt of bids or cancels this IFB. Venders shall acknowledge receipt of all addenda with their Bid.

XI. General Information

A. Proprietary Information

The County of Greenville is a public body and governed by the South Carolina Freedom of Information Act. Documents submitted to the County relating to this Invitation for Bids are subject to requirements of the Freedom of Information Act and may be deemed public records.

B. Errors and Omissions

The Responder will not be allowed to take advantage of any errors or omissions in the Invitation for Bids. Where errors or omissions appear in the IFB, the Responder shall promptly notify the County of Greenville in writing of such error or omission it discovers. Any significant error, omission and/or inconsistency in the specifications are

to be reported as soon as possible but no later than five (5) days before such time the response is to be submitted.

C. Withdrawal of Bid

An official representative of a Responder may withdraw a Responder's response at any time prior to the bid submission deadline. Acceptable proof establishing that he/she is the representative of the Responder must be provided.

D. Non-Endorsement

If the County awards contract, the successful Responder shall not issue any news release or other statement relating to the award or servicing of the agreement which state or imply the County of Greenville's endorsement of the successful Responder's services.

XII. Insurance

The contractor is responsible for and must have all required insurance listed below and shall not commence work under the associated contract until it has obtained all insurance required, and the County has approved such insurance in writing, nor shall the Contractor allow any subcontractor to commence work on its subcontract until all similar insurance required of the subcontractor has been obtained. All insurance policies shall be maintained for the life of the contract.

A. **THE COUNTY SHALL BE NAMED AS "ADDITIONAL INSURED" FOR ITS INTEREST** on all policies of insurance except Worker's Compensation, Automobile Liability, and Professional Errors and Omissions, as regards ongoing operations, products and completed operations, and this shall be noted on the face of the Certificate of Insurance. As a part of the certificate of insurance requirement the contractor shall also include acknowledgement and acceptance of the wavier of subrogation provision granted to the County of Greenville. This acknowledgement and acceptance should be included in the same section of the Certificate of Insurance that evidences the "Additional Insured" provision.

B. Certificates for all such policies of insurance shall be provided by the **Contractor's** insurance agent or broker to the **County** within 10 working days from the date of Notice of Award.

C. All Certificates of Insurance submitted shall provide on the face of the certificate reference to **County's** IFB# 28-11/24/16.

D. **Contractor** will provide **County** a minimum of 30 days advance notice in the event the insurance policies (or an insurance policy) are canceled. Subcontractors approved to perform work on this project are subject to all of the requirements in this Section.

E. **Contractor** agrees to maintain and keep in force during the life of this Agreement, with a company or companies authorized to do business in South Carolina, the following insurance policies:

Comprehensive General Liability:
$1,000,000 per occurrence - combined single limit / $2,000,000 general aggregate, to include products and completed operations.

Automobile Liability:
$1,000,000 per occurrence - combined single limit (Coverage shall include bodily injury and property damage and cover all vehicles including owned, non-owned and hired)

Statutory Worker's Compensation:
Coverage A - State of SC
Coverage B - Employers liability
$1,000,000 Each Accident
$1,000,000 Disease, Per Employee
$1,000,000 Disease, Policy Limit
Policies shall contain a waiver of subrogation in favor of and/or that applies to the County of Greenville, its departments, agencies, boards, employees, and commissions for losses from work performed by or on behalf of the contractor.

No deviation from this coverage's will be accepted unless, in the County's sole discretion, it is more advantageous to the County, i.e., $1,000,000 - a $2,000,000 or $5,000,000 limit would be acceptable.

XIII. Evaluation Criteria

The bids will be evaluated on the following criteria which are in no particular order. Greenville County reserves the right to interview responders to this IFB at its discretion. Greenville County will not be responsible for any costs associated with interviews of responders.

- Responsiveness to this Invitation for Bid
- Cost
- Experience in providing similar size and scope of services
- References

XIV. Illegal Immigration Reform Act Compliance

By submitting an offer, Contractor certifies that it will comply with the applicable requirements of Title 8, Chapter 14 of the South Carolina Code of Laws (originally enacted as Section 3 of The South Carolina Illegal Immigration Reform Act , 2008 S.C. Act No. 280) and agrees to provide upon request any documentation required to establish either: (a) the applicability of Title 8, Chapter 14 to Contractor and any subcontractors or sub-subcontractors; or (b) the compliance with Title 8, Chapter 14 by Contractor and any subcontractor or sub-subcontractor. Pursuant to Section 8-14-60, "A person who knowingly makes or files any false, fictitious, or fraudulent document, statement, or report pursuant to this chapter is guilty of a felony, and upon conviction, must be fined within the discretion of the court or imprisoned for not more than five years, or both." Contractor agrees to include in any contracts with its subcontractors language requiring the subcontractors to (a) comply with the applicable requirements of Title 8, Chapter 14, and (b) include in any contracts with the sub-subcontractors language requiring the sub- subcontractor to comply with the applicable

requirements of Title 8, Chapter 14. In the event any contractor, subcontractor and/or sub-subcontractor is found not to be in compliance with the SC Immigration Reform Act [hereinafter "The Act"], the contractor agrees to fully indemnify the County for any loss suffered by the County as a result of such contractor, subcontractor or sub-subcontractor's failure to comply with the Act.

XV. Safety, Health, and Security

Contractor shall be solely responsible for its activities, that of its employees on the site and activities of its consultants, contractors and/or subcontractors for maintaining a safe job site. Contractor's activities and activities of its consultants, contractors and/or subcontractors shall comply with all local, state, and federal safety regulations and their enforcement agencies. Contractor shall at all times conduct its operations under this Contract in a manner to avoid risk of endangerment to the health and safety of persons and property. The Contractor shall have sole responsibility for implementing its safety and health programs, taking all safety and health precautions necessary and continuously inspecting all equipment, materials and work to prevent, discover, determine and correct any conditions which might result in personal injury, equipment damage or damage to property or the public. Contractor's safety, health and security programs shall be in compliance with all regulatory requirements and shall furnish accident, incident, injury, and other records and reports required by the Occupational Safety and Health Administration, State and Local laws, or by the County.

XVI. Sample Contract

A sample Contract is attached for review.

COUNTY OF GREENVILLE
PROCUREMENT SERVICES DIVISION
MERRIFIELD PARK
DRAINAGE IMPROVEMENT PROJECT
IFB #28-11/24/16

INSTRUCTIONS/TERMS AND CONDITIONS:

1. IFB Opening and Award: Bids will be examined promptly after opening and each bid will be announced to all participants. However, no decision will be made until Procurement and the user Division have had ample time to review each bid. However, award will be made at the earliest possible date. The County reserves the right to award in whole or in part, by item, group of items, geographic area or by section where such action serves the County's best interest. The contract will be awarded to the bid that meets the requirements and criteria set forth in the invitation for bid. No bid may be withdrawn for a period of sixty (60) days after bid opening date. Bids, whether mailed or hand delivered, must be received and time/date stamped in the Procurement Services Office by the closing time and date indicated on the bid. Bids received after the bid closing time/date will not be accepted. By submission of a bid, you are guaranteeing that all goods and services meet the requirement of the solicitation during the contract period.

2. Rights Reserved by Greenville County: Greenville County reserves the right to reject any and all bids, any portion thereof, and waive any technicalities. Accordingly, the right is reserved to make awards in the best interest of the County. Integrity, reputation, experience and past performance will be heavily weighed in bid evaluation. This solicitation does not commit the County of Greenville to award a contract, to pay any costs incurred in the preparation of the bid, or to procure or contract for goods or services listed herein.

3. Responders Qualification: Responders must, upon request of the County, furnish satisfactory evidence of their ability to furnish products or services in accordance with the terms and conditions of these specifications. The County reserves the right to make the final determination as to the bidders ability to provide the products or services requested herein.

4. Responders Responsibility: Each bidder shall be fully acquainted with the conditions relating to the scope and restrictions attending the execution of the work under the conditions of this bid. It is expected that this will sometimes require on-site observation. The failure or omission of a bidder to be acquainted with existing conditions shall in no way relieve the bidder of any obligations with respect to this bid or to any contract as a result of this bid.

5. References: The County requires bidders to list at least three (3) references, names, addresses and telephone numbers of contact persons for companies with whom the bidder has performed or provided similar work, service or product.

6. Waiver: The County reserves the right to waive any Instructions to Bidders, General or Special Terms and Conditions, specifications, or technicalities when it is deemed to be in the best interest of the County to do so.

7. Rejection: Greenville County reserves the right to reject any bid that contains prices for individual items or services that are inconsistent or unrealistic when compared to pricing of like

bids; or ambiguous bids which are uncertain as to terms, delivery, quantity, or compliance with specifications may be rejected or otherwise disregarded if such action is in the best interest of the County.

8. Bid form: Each bidder must submit a bid on the form provided. The bidder shall sign his bid correctly or the bid may be rejected. If the bid shows any omissions, alteration of form, unauthorized additions, a conditional bid or any irregularities of any kind, bid may be rejected. Bid may not be accepted on any other form then the bid form provided.

9. Questions: Questions shall be submitted in writing to Bob Brewer, CPPO, CPPB, Procurement Services Division, County of Greenville, 301 University Ridge, Suite 100 by Fax (864) 467-7304 or by E-Mail to rbrewer@greenvillecounty.org by 5:00 P.M., E.S.T., November 17, 2016.

10. Bid Bond: Bidders shall submit with their bid a bid bond in the amount of 5% of the bid price. This bond may be in the form of Bid Bond from the American Institute of Architects, Certified Check, Cashier's or Bank Money Order of any national or state bank and shall be made payable to Greenville County. Bids submitted without being accompanied by any of the foregoing as required, shall be considered informal and will be rejected. Any bid accompanied by a bid bond not properly executed in the opinion of the County Attorney, may be rejected. The bond will be forfeited to the County by the successful bidder as liquidated damages in case a bid award is made to that bidder and the contract and bond are not promptly and properly executed.

11. Return of Bid Bond: When bids are awarded, the Purchasing and Contracts Division will return immediately all checks, except that of the successful bidder. The check of the successful bidder will be returned upon compliance with the performance and payment bond requirements.

12. Performance and Payment Bond: The successful bidder, within fifteen (15) working days after acceptance of the bidder's offer by the County, shall furnish a satisfactory performance and payment bond in the amount of the total bid price. The performance and payment bond must be received by the county prior to issuance of an executed contract and Notice to Proceed. The fifteen (15) working days may be extended upon written approval by the Purchasing Manager. A copy of the written approval shall be transmitted to the successful bidder stating the terms of any extension. In the event that the bidder fails to deliver to the County Purchasing and Contracts Division the performance and payment bond in said period of fifteen (15) working days after acceptance of the bidder's offer by the County, then the bid bond of the bidder shall be retained by the County in its entirety and the award will be withdrawn from the bidder. The Bond must have approval by the County Attorney's Office before it is made effective. The successful bidder shall have as surety a corporate surety authorized to act as surety in South Carolina. The Performance and Payment Bond will insure that the successful bidder will promptly make payments to all persons supplying labor or materials to the bidder; and shall guarantee to indemnify and save the County, its officers, divisions, and employees harmless from all costs, damages, and expenses growing out of or by reason of the successful bidder's failure to comply and perform the work and complete the contract in accordance with the specifications in the matter of making, furnishing and/or delivering said work or supplies. The Performance and Payment Bond will be in effect for one year after completion of the contract.

13. Availability of Bonding Agency: In addition, the bonding company must have an agent available to meet with County officials to clarify and explain the County's responsibility in maintaining the integrity of the bond.

14. Specification Changes, Additions and Deletions: All changes in specifications shall be in writing in the form of an addendum and furnished to all bidders. The County of Greenville shall not be responsible for any verbal information given by any employees of the County of Greenville in regard to this bid.

15. Number of Bid Copies: Please submit One (1) Original and Three (3) Copies of your bid.

16. Bid Changes: Bids, amendments thereto or withdrawal requests received after the advertised time for bid opening, shall be void regardless of when they were mailed.

17. Bid Price: The bid price presented as a result of these specifications shall be for the contract period. The bid shall be acceptable for sixty (60) days from the date of opening. All prices and notations shall be printed in ink or typewritten. Errors should be crossed out, corrections entered and initialed by the person signing the bid. Erasures or use of typewriter correction fluids may be cause for rejection. No bid shall be altered or amended after specified time for opening.

18. Federal, State and Local Laws: The contractor assumes full responsibility and liability for compliance with any and all local, state and federal laws and regulations applicable to the contractor and his employees including, but not limited to, compliance with the EEO guidelines, the Occupational Safety and Health Act of 1970, and minimum wage guidelines.

19. Tie Bids: In the case of tie bids, the County reserves the right to make the award based on the factors outlined in Section 3-202 of the Procurement Ordinance, or in what it considers to be in the best interest of the County.

20. Deduction and Holdbacks: In addition to the County's right of termination, the County shall be entitled to full reimbursement for any costs incurred by the County by reason of the contractor's failure to perform or to satisfactorily perform its responsibilities and duties. Such costs may include, but are not limited to, the cost of using the County's employees or employees of any other entity to perform the obligations of the contract. The County may obtain any such reimbursement by deduction from payments otherwise due to the contractor or by any other proper and lawful means. All deductions from any money due the contractor are to be as liquidated damages and not as a penalty. It is the County's intent to give the contractor a reasonable opportunity whenever practicable, to correct any such failure to perform or satisfactorily perform its responsibilities and duties. In no circumstances shall any uncorrected situation extend for more than five (5) days. The County will make the following deductions from the contract sum in the event that the contractor fails to perform any of the required work within the required time limits in the event the County carries out the work using its forces or another contractor.

    1. For use of County's forces – actual cost involved.

    2. For use of another contractor – the amount charged by said contractor.

    The County reserves the right to hold back and/or withhold part of complete payments for unsatisfactory work, deficiencies, etc. until said defects are satisfactorily corrected or cleared.

21. Evaluation Criteria: The bids will be evaluated on the following criteria which are in no particular order. Greenville County reserves the right to interview responders to this IFB at its discretion. Greenville County will not be responsible for any costs associated with interviews of responders.

- Responsiveness to this Invitation for Bid
- Cost
- Experience in providing similar size and scope of services
- References

22. Quality: Unless otherwise indicated in this bid it is understood and agreed that any items offered or shipped on this bid shall be new and in first class condition unless otherwise indicated herein.

23. MBE/WBE Participation – Affirmative Action:

A. MBE/WBE – Vendors submitting bids are encouraged to solicit MBE/WBE participation in fulfilling their contract. Indicate in your response any MBE/WBE areas of involvement for monitoring purposes.

B. The successful bidder will take affirmative action in complying with all Federal and State requirements concerning fair employment and treatment of all employees, without regard or discrimination by reason of race, color, religion, age, sex, national origin or physical handicap.

24. Default: In case of default by vendor the County may procure the item or services from other sources and may recover the loss occasioned thereby from any unpaid balance due the vendor or by proceeding against the vendor's performance bond, if any, and/or by suit against vendor.

25. Termination: This contract is subject to termination for failure to comply with the specifications, terms and conditions by the County or the contractor upon written notice by registered mail. Such termination will be effective not less than ten (10) days nor more than sixty (60) days after receipt of such notice from the County nor less than thirty (30) days nor more than sixty (60) days after receipt by the County from the contractor. Receipt of notice by one party to terminate the contract will nullify any subsequent reciprocal notice by the receiving party prior to the announced termination date. In the event of termination the County shall be responsible to pay the contractor only for work satisfactorily completed upon the effective date of termination and shall not be responsible for any other charges.

26. Termination for Convenience: Greenville County may terminate for convenience any contract resulting from this solicitation by providing sixty (60) calendar days advance written notice to the vendor.

27. Non-Appropriation: Any contract entered into by the County resulting from this invitation shall be subject to cancellation without damages or further obligation when funds are not appropriated or otherwise made available to support continuation of performance in a subsequent fiscal period or appropriated year.

28. Incorporation of Bid into Contract: The terms, conditions, and specifications of this bid and the selected firm's response are to be incorporated into the contract.

29. S.C. Law Clause: Upon award of contract under this bid, the person, partnership, association or corporation to whom the award is made must comply with the laws of South Carolina which require such person or entity to be authorized and/or licensed to do business with this State. Notwithstanding the fact that applicable statutes may exempt or exclude the successful bidder from requirements that it be authorized and/or licensed to do business in this State, by submission of this signed bid, the bidder understands and agrees to be bound to the jurisdiction and process of the courts of the State of South Carolina, as to all matters and conflicts or future conflicts under the contract and the performance thereof, including any questions as to the liability for taxes, licenses, or fees levied by the State.

30. Assignment Clause: Successful bidder will be required to give the County ninety (90) days notice in the event of a change in the ownership of this contract. The County is under no obligation to continue this contract with an assignee. No contract or its provisions may be assigned, sublet, or transferred without the written consent of the County.

31. Indemnification: The contractor agrees to indemnify and save harmless the County of Greenville and all County officers, agents and employees from any and all claims, suits, actions, legal proceedings, damages, costs, expenses & attorney fees of every name and description, arising out of or resulting from the use of any materials furnished by the contractor, or any work done in the performance of the contract arising out of a willful or negligent act or omission of the provider, its officers, agents and employees; provided that such liability is not attributable to a willful or negligent act or omission on the part of the County, its officers, agents and employees.

32. Deviations from Specifications: Any deviation from specifications indicated herein must be clearly pointed out; otherwise, it will be considered that items offered are in strict compliance with these specifications, and successful bidder will be held responsible therefore. Deviations must be explained in detail on separate attached sheets(s). The listing of deviations, if any, is required but will not be construed as waiving any requirements of the specifications. Deviations found in the evaluation of the bid and not listed may be cause for rejection. Bidders offering substitute or equal items must provide information sufficient enough to determine acceptability of item offered.

33. Minor Deviations: The County reserves the right to negotiate minor deviations from the prescribed terms, conditions and requirements with the selected vendor.

34. Price Reductions: By submitting a bid in response to this solicitation, bidder guarantees that Greenville County is receiving the lowest price offered by bidder's company for like items/services to other customers. If at any time during the contract period, bidder offers a lower price to another customer, upon discovery Greenville County shall reserve the right to take any or all of the following actions:

a) Cancel the contract, if it is currently in effect;

b) Determine the amount, which the County was overcharged and submit a request for payment from the bidder for that amount or deduct the difference from any amount due the bidder;

c) Demand that the bidder offer the County the same pricing schedule;

d) Take the necessary steps to collect any performance surety provided on the applicable contract.

35. Contractor License Requirement: The contractor shall procure all permits and licenses, and pay all charges and fees necessary and incidental to the lawful conduct of his business. He shall keep himself fully informed of existing and future Federal, State, and Local Laws, ordinances and regulations, which in any manner affect the fulfillment of his contract and shall comply with the same.

36. Conflict of Interest Statement: The contractor may become involved in situations where a conflict of interest could occur due to individual or organizational activities within the County. The vendor, by submitting a bid, is in essence assuring the County that his company, and/or subcontractors, is in compliance with all federal, state, and local conflict of interest laws, statutes, and regulations.

37. Insurance:

The contractor is responsible for and must have all required insurance listed below and shall not commence work under the associated contract until it has obtained all insurance required, and the County has approved such insurance in writing, nor shall the Contractor allow any subcontractor to commence work on its subcontract until all similar insurance required of the subcontractor has been obtained. All insurance policies shall be maintained for the life of the contract.

A. THE COUNTY SHALL BE NAMED AS "ADDITIONAL INSURED" FOR ITS INTEREST on all policies of insurance except Worker's Compensation and Professional Errors and Omissions regarding ongoing operations, products and completed operations, and this shall be noted on the face of the Certificate of Insurance. As a part of the certificate of insurance requirement the contractor shall also include acknowledgement and acceptance of the wavier of subrogation provision granted to the County of Greenville. This acknowledgement and acceptance should be included in the same section of the Certificate of Insurance that evidences the "Additional Insured" provision.

B. Certificates for all such policies of insurance shall be provided by the contractor's insurance agent or broker to the County within 10 working days from the date of Notice of Award.

C All Certificates of Insurance submitted shall provide on the face of the certificate reference to County's IFB# 28-11/24/16.

D. Contractor will provide County a minimum of 30 days advance notice in the event the insurance policies (or an insurance policy) is canceled.
Subcontractors approved to perform work on this project are subject to all of the requirements in this Section.

E. Contractor agrees to maintain and keep in force during the life of this Agreement, with a company or companies authorized to do business in South Carolina, the following insurance policies:

Comprehensive General Liability:
1,000,000 per occurrence - combined single limit / $2,000,000 general aggregate, to include products and completed operations.

Automobile Liability:
$1,000,000 per occurrence - combined single limit (Coverage shall include bodily injury and property damage and cover all vehicles including owned, non-owned and hired)

Statutory Worker's Compensation:
Coverage A - State of SC
Coverage B - Employers liability
$1,000,000 Each Accident
$1,000,000 Disease, Per Employee
$1,000,000 Disease, Policy Limit

Policies shall contain a waiver of subrogation in favor of and/or that applies to the County of Greenville, its departments, agencies, boards, employees, and commissions for losses from work performed by or on behalf of the contractor.

No deviation from these coverages will be accepted unless, in the County's sole discretion, it is more advantageous to the County, i.e., $1,000,000 - a $2,000,000 or $5,000,000 limit would be acceptable.

38. Contracts: The County reserves the option to prepare and negotiate its own contract with the vendor, giving due consideration to the stipulations of the vendor's contracts and associated legal documents. Vendors should include with their submittal a copy of any proposed standard contract.

39. Contractor Liability: The contractor assumes full responsibility for all injuries to, or death of any person and for all damage to property, including property and employees of the County and for all claims, losses or expense which may in any way arise out of the performance of the work, whether caused by negligence or otherwise; and the contractor shall indemnify and save the County harmless from all claims, losses, expense, or suits for any such injuries, death or damages to property, and from all liens, losses, expenses, claims or causes of action of any sort which may arise out of the performance of the work, and shall defend, on behalf of the County and suit brought against the County for attorney's fees and for all other expenses incurred by the County in connection with or as a result of any such suit, claims, or loss. Under no circumstances and with no exception will Greenville County act as arbitrator between the contractor and any subcontractor. The contractor will be solely responsible for compliance with

building code requirements, all dimensions, and all conditions relating to his work under this contract. Workmanship shall be first quality in every respect. All measures necessary to ensure a first class job shall be taken.

40. Sub-Contracting: The contractor shall not subcontract any portion of this contract without proper written approval from the County.

41. Non-Collusion: The contractor expressly warrants and certifies that neither the Contractor nor its employees or associates has directly or indirectly entered into any agreement, participated in any collusion or otherwise taken any action in restraint of free competitive bidding in conjunction with this bid.

42. Prohibition of Gratuities: Neither the contractor nor any person, firm or corporation employed by the contractor in the performance of the contract shall offer or give, directly or indirectly, to any employee or agent of the County, any gift, money, or anything of value, or promise any obligations, or contract for future reward or compensation at any time during the term of this contract.

43. Publicity Releases: Contractor agrees not to refer to the award of this contract in commercial advertising in such a manner as to state or imply that the products or services provided are endorsed or preferred by the user. The contractor shall not have the right to include the County's name in its published list of customers without prior approval of the County. With regard to news releases, only the name of the County, type and duration of contract may be used and then only with prior approval of the County. The contractor also agrees not to publish, or cite in any form, any comments or quotes from the County Staff unless it is a direct quote from the Public Information Officer.

44. Public Record: All information submitted relating to this bid, except for proprietary information, shall become part of the public record to the extent required by the Freedom of Information Act. Vendors shall be responsible for clearly marking all information submitted that is proprietary based on the Freedom of Information Act. The County assumes no responsibility for the release of information not clearly and properly labeled as proprietary.

45. Precedence: In the event of conflict between the terms and conditions and the specifications, the more restrictive instruction shall take precedence unless stated otherwise in the specifications.

46. Illegal Immigration Reform Act Compliance: By submitting an offer, Contractor certifies that it will comply with the applicable requirements of Title 8, Chapter 14 of the South Carolina Code of Laws (originally enacted as Section 3 of The South Carolina Illegal Immigration Reform Act , 2008 S.C. Act No. 280) and agrees to provide upon request any documentation required to establish either: (a) the applicability of Title 8, Chapter 14 to Contractor and any subcontractors or sub-subcontractors; or (b) the compliance with Title 8, Chapter 14 by Contractor and any subcontractor or sub-subcontractor. Pursuant to Section 8-14-60, "A person who knowingly makes or files any false, fictitious, or fraudulent document, statement, or report pursuant to this chapter is guilty of a felony, and upon conviction, must be fined within the discretion of the court or imprisoned for not more than five years, or both." Contractor agrees to include in any

contracts with its subcontractors language requiring the subcontractors to (a) comply with the applicable requirements of Title 8, Chapter 14, and (b) include in any contracts with the sub-subcontractors language requiring the sub- subcontractor to comply with the applicable requirements of Title 8, Chapter 14. In the event any contractor, subcontractor and/or sub-subcontractor is found not to be in compliance with the SC Immigration Reform Act [hereinafter "The Act"], the contractor agrees to fully indemnify the County for any loss suffered by the County as a result of such contractor, subcontractor or sub-subcontractor's failure to comply with the Act.

47. Safety, Health, and Security: Contractor shall be solely responsible for its activities, that of its employees on the site and activities of its consultants, contractors and/or subcontractors for maintaining a safe job site. Contractor's activities and activities of its consultants, contractors and/or subcontractors shall comply with all local, state, and federal safety regulations and their enforcement agencies. Contractor shall at all times conduct its operations under this Contract in a manner to avoid risk of endangerment to the health and safety of persons and property. The Contractor shall have sole responsibility for implementing its safety and health programs, taking all safety and health precautions necessary and continuously inspecting all equipment, materials and work to prevent, discover, determine and correct any conditions which might result in personal injury, equipment damage or damage to property or the public. Contractor's safety, health and security programs shall be in compliance with all regulatory requirements and shall furnish accident, incident, injury, and other records and reports required by the Occupational Safety and Health Administration, State and Local laws, or by the County.

SPECIFICATIONS REFERENCE:

1. Definition: Specifications pertain to written standards and requirements for materials, construction procedures, testing, quality control, and workmanship for the project. The specifications to be used for the project shall include, but are not be limited to the following:

2. Construction Plans: Designed by TranSystems, specifications are shown as notes, text, and details in the project design plans.

3. SCDOT Standard Specifications: All workmanship and materials provided on the project shall conform to the requirements contained in the South Carolina Department of Transportation Standard Specifications for Highway Construction (Edition of 2007) including applicable addenda and errata issued by SCDOT and with amendments as noted in the General Conditions.

4. SCDOT Supplemental Specifications: All workmanship and materials provided on the project shall conform to all applicable supplemental specifications issued by SCDOT.

5. SCDOT Standard Drawings: The contractor shall comply with current Standard Drawings (English version) issued by SCDOT.

6. Unspecified Items: Any items shown in the construction plans which are not covered in the SCDOT Standard Specifications shall comply with the current County of Greenville Engineering Department Standard Specifications.

7. Precedence: Any apparent discrepancies between project plans and specifications should be called to the attention of the City/County Project Manager for resolution. Until resolution is issued in written form, project plans have precedence over specifications.

Underground Utility Protection: Existing underground utilities on the public and private lands may not be shown or, if shown, they may not be shown in their entirety. It is the Contractor's responsibility to coordinate with the local utility locating service and/or the utility providers to locate all underground utilities within the project limits, and it is the Contractor's responsibility to take whatever precautions necessary during construction to safeguard the condition of the underground utilities.

Contact Agencies: The following is a list of contacts for the project. The names and numbers are subject to change, so the Contractor is responsible for verifying the info.

Greenville County – Hesha N. Gamble, PE (864) 467-4612
County Project Manager - Jamal Hamam, (864) 982-7155
Greenville Water System - Scott Tackett, (864) 241-6100
Piedmont Natural Gas – Carlos Roper, (864) 235-5844 x3116
Duke Energy Corporation –Jim Landreth, (864) 230-1226
AT&T – Mike Nat, (864) 864-494-4822
Charter Communications – Steve Fowler, (864) 3031503
SCDOT Maintenance Division - Jason Cisson, (864) 241-1224

Contract Time: All work specified herein must be substantially completed in (120) calendar days from Notice to Proceed. If the contractor fails to substantially complete the work within the specified time, liquidated damages per SCDOT Specifications Section 108.9 or as described in this bid package may be assessed up to value of the contract (total bid). The penalty may be drawn from any payment due, or the performance bond, at the discretion of the County of Greenville.

Inspections, Certifications, and Testing Responsibility: On this project, the parties responsible for providing inspections, certifications and testing on the project are shown in the table below. The costs for providing inspections, testing and certifications including labor, equipment, transportation, consumables, and any other incidental costs shall be borne by the responsible party. Any repeat inspections, certifications, or testing required for rework and/or to rectify substandard work or materials on the project shall be provided by and paid for by the responsible party.

Item or Activity	Performed By	Responsible Party
Field Density (compaction)	Independent Laboratory	Contractor
Road Sub grade (proof-roll)	Contractor	Contractor
Concrete Testing	Conc. Supplier or Laboratory	Contractor
Material Certifications	Material Supplier	Contractor
Project Daily Safety Report	Project Superintendent	Contractor
Work zone Traffic Control Review	Project Superintendent	Contractor
CEPSCI Inspections	Licensed CEPSCI Inspector	County
Shop Drawings	Submitted by Supplier/Contractor	Reviewed by County

Grassing: As indicated in LAWNS AND GRASSING SECTION 02930. Furthermore, deliver seed to match each yard existing grassing and as directed by engineer. Contractor to check with each property owner to ensure the proper grassing is placed. Seed(s) shall be State-certified seed and of the latest season's crop. Mix seed on site according to the following mixtures by weight:

GENERAL PROVISIONS

For this contract, the definitions and terms contained in the "South Carolina State Highway Department Standard Specifications for Highway Construction, Edition of 2007", shall apply with the understanding County of Greenville reserves the right to any changes Additions/deletions. All quantities are estimated it is the contractor's responsibility to verify and measures all items.

Procurement Procedures:

The "County of Greenville, South Carolina, Procurement Ordinance, adopted June 17, 2003, and all amendments thereafter, by the Greenville County Council shall govern procurement procedures. The County reserves the right to reject all bids for this project.

Licenses:

The Contractor must be a licensed general contractor in the State of South Carolina and must possess a valid South Carolina Bidder's License.

Permits:

All work shall be subject to the applicable permitting requirements of County, State, and Federal agencies. Clearing, grading, and erosion control measures shall comply with the Greenville County Storm water Management Ordinance.

Warranty:

All materials and workmanship must be free of defects for a period of one year from the date of completion of all contract work specified herein. By acceptance of the contract, the Contractor agrees promptly to repair, to the satisfaction of the County Engineer, any defects in materials or workmanship at the Contractor's expense.

Scheduling, Notification, & Coordination:

The Contractor shall develop and maintain a proposed schedule of work to submit to Greenville County. The schedule shall be provided in a **bar-chart** format listing the sequence of project activities within the contract time frame. The schedule shall be updated monthly and submitted to Greenville County. Prior to the beginning work, the County will notify the affected residents about the start date for construction. The contractor shall notify the County at least 7 days prior to beginning work.

The contractor shall be responsible for coordinating with all utilities which will be impacted by the project, or have easements in the work area. The contractor shall provide the County with copies of all correspondence and telephone transcripts with the utility providers. The contractor shall be responsible for coordinating with the Piedmont Utility Protection Service and/or the utility providers for locating underground utilities before digging. The contractor shall be responsible for all damage to existing utilities caused by the contractor's crews and machinery, or subcontractors' crews and machinery. The contractor shall be responsible for designating a staging area and provide the County with a copy of the agreement for the use of that area.

Contract Time:

All work phases specified herein must be completed as stated on the Project Description

Sheet, **from notice to proceed.** If the contractor fails to satisfactorily complete the work within the specified time, liquidated damages of **$250.00** per calendar day shall be assessed up to value of the contract (total bid). The penalty may be drawn from any payment due, or the performance bond, at the discretion of the County.

Working Days:

The Contractor may work any calendar day that weather permits, excluding Sundays.

Incorporation of Documents:

All documents, forms, specifications or other published items included by reference in these special provisions shall be considered incorporated herein and shall be a part of this document. All items incorporated herein are available for review in the Greenville County Procurement Services Division.

Contact Agencies:

Greenville County Engineering & Maintenance – Hesha Gamble, 467-7010
Greenville County Engineering & Maintenance - Jamal Hamam, 467-7017
City of Greer – Don Holloman (864) 848-2181
CPW – Randle Olson, PE (864) 968-3235
Greenville Water System – Scott Tackett, 241-6112
Metropolitan Sewer District – Richard Riddle, 277-4442
Western Carolina Sewer Authority – Andre' Mathis, 299-4020
Duke Power Company –Engineering Department, 370-5011
AT & T Engineering Dept. - Engineering Dept., 298-0700

Roadway/Driveway Damage:

Any damage which occurs to existing pavement, curbs, or drainage structures (in areas not already designated as part of the construction project) from the contractor's or subcontractors' tracked equipment or other machinery **shall be repaved and/or repaired by the contractor at his expense to the County's satisfaction.**

Pre-Bid Meeting:

A **pre-bid meeting** will be held at **1:00 P.M., E.S.T., November 15, 2016** at the Greenville County Procurement Services Division, **301 University Ridge, Suite 100, Greenville County, SC 29601**. A site visit will follow the meeting.

Pre-Construction Conference:

A pre-construction conference will be scheduled for the chosen contractor to discuss any special concerns. The chosen contractor shall provide the proposed work schedule to the County at the pre-construction conference. The County and utility providers affected by the work will be part of the conference. A date and time for the conference shall be determined once the bids have been received and a contract awarded.

Engineer Authority:

The County Engineer shall give all orders and directions contemplated under this contract and specifications relative to the execution of the work. The Engineer shall determine the amount, quality, acceptability, and fitness of the several kinds of work and materials which are to be paid for under this contract and shall decide all questions which may arise in relation to said work and the construction thereof. The County Engineer's estimates and decisions shall be final and conclusive. The contractor agrees, if any questions arise between the parties hereto relative to said contract or specifications, the determination or decision of the County Engineer shall be a condition precedent to the right of the Contractor to receive any money or payment for work under this contract affected in any manner or to any extent by such question.

The County Engineer shall decide the meaning and intent of any portion of the specifications and of any part or drawings where the same may be found obscure or be in dispute. Any difference or conflicts in regard to their work, which may arise between the Contractor under this contract and other contractors performing work for the County, shall be adjusted and determined by the County Engineer.

Method of Measurement and Basis of Payment:

The quantity of work completed for all items shall be measured in accordance with the units indicated in each section of the specifications. The quantities will be paid for at the contract unit price bid for the items listed on the itemized bid form. Said prices and payments shall be full compensation for furnishing all materials, labor, tools, equipment, supplies, taxes and incidentals necessary to complete the work. All work shall be performed in a neat and workmanlike manner. **All quantities listed herein are estimated**. The County reserves the right to **increase** or **decrease** all quantities as indicated herein without limit at no change in the unit bid price. Progress payments made to the contractor are **not** to be considered as a final acceptance.

Retainage on monthly progress payments will be ten (10%) percent of approved monthly invoices until satisfactory completion of the contract.

SPECIFICATIONS

Specifications pertain to written standards and requirements for materials, construction procedures, testing, quality control, and workmanship to be provided for the project. The specifications to be used for the project shall include, but are not be limited to the following:

SCDOT Standard Specifications.

The 2007 edition of the South Carolina State Highway Department Standard Specifications for Highway Construction will apply, except where Greenville County Standard Specifications state otherwise (see below).

Greenville County Standard Specifications

Greenville County Standard Specifications shall take precedence over the 2007 edition of the South Carolina State Highway Department Standard Specifications for Highway Construction whenever there is a conflict between the two specifications. The County standard specifications are included herein for the following:

Site Clearing (02110)
Earthwork (02200)
Erosion Control (02270)
Rip Rap (02271)
Paving (02510)
Concrete Paving (02520)
Water (02668)
Storm Drainage (02720)
Sewer (02730)
Fencing & Gates (02830)
Lawns & Grassing (02930)
Landscaping (02931)

SUPPLEMENTAL SPECIFICATIONS
Rock Excavation

a. Rock will be defined as follows:
General Excavation - any material which cannot be excavated with a single tooth ripper drawn by a crawler tractor having a minimum draw bar pull rated at not less than 56,000 pounds.
Trench Excavation - any material which cannot be excavated with a track mounted backhoe with a bucket curling force of not less than 20,760 pounds. The contractor shall notify the County project manager in writing when rock is encountered to verify rock excavation prior to any rock removal.

b. Rock Quantity Measurement - All rock quantities must be observed, measured, and verified by the County project manager or representative prior to backfilling. In trenches, credit will be given for the rock excavated to a maximum depth of 6" below the pipe invert and a maximum of 18" on each side of the pipe. Rock excavated outside of this zone will not credit.

c. Blasting - If conditions are such that blasting or any use of explosives is required, the Contractor, prior to blasting, shall submit to the County Engineer satisfactory evidence of blasting and explosive insurance in the amounts of bodily injury and property damage insurance required in the Special Conditions and shall provide to the satisfaction of the County Engineer the experience and capability of the Contractor's organization to safely handle and perform such operations. Handling and storing of blasting materials shall be performed only by qualified persons skilled in such work. Adequate precautions shall be taken to prevent accidents, injury to persons or damage to property. Qualifications of blasting operation personnel and safety precautions shall be in full compliance with all codes governing such operations and shall be approved by the County Engineer. Full responsibility for all blasting operations shall remain with the Contractor, and he shall make good any damage that may result.

BID FORM
MERRIFIELD PARK
DRAINAGE IMPROVEMENTS PROJECT
IFB# 25-11/24/14

Proposal of _____(hereinafter called "BIDDER"), organized and existing under laws of the State of South Carolina.

To: County of Greenville (hereinafter called "OWNER"). In compliance with your invitation for Bids, BIDDER hereby proposes to perform all WORK for the construction of Merrifield Park Drainage Improvements Project in strict accordance with the CONTRACT DOCUMENTS within the time set forth therein, and at the prices stated below.

By submission of the BID, each BIDDER certifies, and in the case of a joint BID each party thereto certifies as to his own organization, that this BID has been arrived at independently, without consultation, communication, or agreement as to any matter relating to this BID with any other BIDDER or with any competitor.

BIDDER hereby agrees to commence WORK under this contract on or before a date to be specified in the NOTICE TO PROCEED and to substantially complete project within One Hundred Twenty (120) consecutive calendar days thereafter. BIDDER further agrees to pay as liquidated damages, the sum of Two Hundred Fifty ($250.00) Dollars for each consecutive calendar day thereafter as provided in the General Conditions.

BIDDER acknowledges receipt of the following ADDENDUM:

_____

_____

_____

_____ INITIALS

BID FORM

All work performed as essential to the completion of the intent of the Contract Documents shall be paid for in accordance with the Bid Schedule. No direct payment will be made for work performed which is not shown as a separate Bid Item. All costs shall be included in the various pay items in the Bid Schedule.

Item #	Item	QTY	Unit	Unit Price		Total Price	
1	Mobilization & De-Mobilization	1.0	LS				
2	Construction Stakes, Lines & Grades	1.0	LS				
3	*Traffic Control	1.0	LS				
	*item to incl. detour signage, Construction Signs & barricades, etc.						
4	Clearing & Grubbing Tree Removal and Stump Grinding within Construction Limits	1.0	LS				
5	Tree Protection	13.0	EA				
6	Rem. & Disp. of Exist. Storm Drainage System	1.0	LS				
7	Saw Cut, Rem. & Disp. of Exist. Road & Driveways Pavement	1.0	LS				
8	Unclassified Excavation	160.0	CY				
9	Rock Excavation	0.0	CY				
10	Borrow Excavation – Select Material compacted 98%	1,600.0	CY				
11	Top Soil	240.0	CY				
12	Aggregate Base Course (6" Uniform)	600.0	Ton				
13	Maintenance Stone/CR14	750.0	Ton				
14	2" Hot Mix Asphalt Surface Course, Type C	400.0	Ton				
15	Permanent Construction Signs (Ground Mounted)	512.0	SF				
16	15" RCP Class III	136.0	LF				
17	18" RCP Class III	544.0	LF				
18	24" RCP Class III	624.0	LF				
19	30" RCP Class III	1088.0	LF				
20	42" RCP Class III	48.0	LF				
21	Concrete Box Culvert 5'x3' With Wings - Match BC	103.0	LF				
22	Concrete Box Culvert 7'x4' With Wings - Match BC	50.0	LF-				
23	Concrete Box Culvert 9'x4' With Wings – Match BC	42.0	LF				
24	Catch basin with Manhole Cover 6'-10' Deep	9.0	EA				
25	2x3 Drop Inlet field determined	3.0	EA				
26	Catch Basin Type 1 with Hood	2.0	EA				
27	Catch Basin With Manhole Cover Type 16	4.0	EA				

_____ INITIALS

Item #	Item	QTY	Unit	Unit Price		Total Price	
28	Catch Basin With Manhole Cover Type 17	18.0	EA				
29	Catch Basin With Manhole Cover Type 18	1.0	EA				
30	Creeks Bypass Water Diversion	1.0	LS				
31	6" Extruded Curb	2,600.0	LF				
32	6" Concrete Driveways	525.0	SY				
33	6" Concrete Sidewalk	45.0	SY				
34	Remove & Reset Fence	180.0	LF				
35	RIP RAP With Geo-Textile Fabric	120.0	Ton				
36	Brick Upstream Abandon Pipes	1.0	LS				
37	Moving Item(s) All Mail Boxes and Posts Are New	1.0	LS				
38	Perm. Seeding (mulched) to Match each yard type of Grass	4.0	MSY				
39	Sod to Mach Existing	500.0	SY				
40	Restore Properties Pins	1.0	LS				
41	Erosion Control Blanket Class B	2,500.0	SY				
42	Sediment Tube	280.0	LF				
43	Top soil (Back Fill Behind Curb & Yards)	160.0	CY				
44	Silt Fence	2,500.0	LF				
45	Check Dam for Erosion Control	3.0	EA				
46	Tie Laterals (Roof Drain, Etc.)	1.0	LS				
47	Re-Grade all disturbed Yards	1.0	LS				
48	Water Lines Relocation	7.0	EA				
49	8" Ductile Iron pipe Sewer Line	100.0	LF				
50	4" Ductile Iron pipe Sewer Service Line	80.0	LF				
51	Remove & Re-Install Sprinkle System for each property	16	EA				
				TOTAL			

Project Total Bid to include all required work described in this document and/or on the project plans

_____ INITIALS

BIDDER ACKNOWLEDGES READING THE "INSTRUCTIONS TO BIDDERS", "BID SCHEDULE", AND "AGREEMENT", AND IS IN AGREEMENT WITH THE CONDITIONS OF EACH.

Failure to complete, sign and return this page will cause the bid to be non-responsive and ineligible for award consideration.

PROPOSAL SIGNATURE (All persons submitting proposals for this project shall sign below)

_____
Legal Entity

_____
Signature

_____
Printed Name

SEAL - If Corporation

_____
P.O. Box

_____
Street Address

_____
City, State, Zip Code

_____	_____
Telephone #	**Fax #**
_____	_____
S.C. Contractors License #	**SCDOT Prequalified Bidder #**
_____	_____
Federal ID#	**S.C. Sales Tax #**

FAILURE TO COMPLETE AND RETURN THIS PAGE WILL RESULT IN YOUR BID NOT BEING CONSIDERED FOR AWARD.

_____ INITIALS

BIDDER QUALIFICATION QUESTIONNAIRE

Merrifield Park Drainage Improvements Project

Submitted by _____
(NAME OF BIDDER)

SC General Contractor's License #_____
( ) A Partnership ( ) A Corporation ( ) An Individual

Federal Identification #_____

Principal Office Address & Phone Numbers:

_____

_____

(1) How many years has your organization been in business as a contractor under your present name?

_____

(2) How many years experience in construction work has your organization had as a general contractor?

_____

As a subcontractor?

_____

(3) List below the requested information concerning projects your organization has completed in the last five (5) years for the type of work required in this project. (Use additional sheets if necessary)

Project Title	Contract Amount	Required Completion Date	Actual Completion Date	Name/Address/Phone Of Owner

(4) Have you ever failed to complete any work awarded to you? If so, where and why?

_____

_____

_____

(5) Has any officer or partner of your organization ever been an officer or partner of some other organization that failed to complete a construction contract or was issued a Stop Work Order? If so, state the name of the individual, the name of the organization, and reason therefore.

_____

_____

_____

(6) Has any officer or partner of your organization ever failed to complete a construction contract handled in his/her own name? If so, state the name of the individual, the name of the owner and reason therefore.

_____

_____

_____

(7) Below, please give any information which; would indicate the size and capacity of your organization, including number of employees, equipment owned by your organization, etc., which are available for utilization on this contract.

_____

_____

_____

(8) What is your bonding capacity? _____

(9) What amount of your bonding capacity has been used as of the date of this bid?

_____

_____

(10) How many applications for performance & payment bonds have you made in the last three (3) years?

_____

(11) How many of these applications were not approved?

_____

_____

(12) Have any claims been filed against a bond provided for you by your surety bond company in the last five (5) years? If so, describe the nature of the claims and give the names of the surety companies, dates of each claim, identifying numbers of each claim, amounts of each claim and the status of each claim. (Use additional sheets if necessary)

_____

_____

_____

_____

(13) Has your company been in disputes or litigations in the last five (5) years over construction projects which are completed or still pending completion? If so, describe the nature of the disputes or litigations and state the owner's name, address, telephone and amount of dispute or litigation. (Use additional sheets if necessary)

_____

_____

_____

_____

I, the undersigned, do hereby declare that the foregoing statements are true and correct, all as of the date hereinafter set forth, and that those examining this document have my permission to contact any or all of those parties listed in this questionnaire. Incorrect or misleading statements in this questionnaire shall be grounds for a determination of non-responsibility with respect to such contractor.

****

_____

(SIGNATURE OF BIDDER)

_____

(TYPE OR PRINT COMPANY NAME)

_____

(TYPE OR PRINT ADDRESS)

STATE OF SOUTH CAROLINA) **CONSTRUCTION AGREEMENT**
COUNTY OF GREENVILLE)

THIS AGREEMENT is made and entered into on this _____ day of _____, 2016, by and between the **COUNTY OF GREENVILLE**, a political subdivision of the State of South Carolina, having its principle place of business at 301 University Ridge, Greenville, S.C. 29601 ("**COUNTY**"), and _____, located at _____ ("**CONTRACTOR**").

IN CONSIDERATION of the covenants hereinafter set forth, the parties mutually agree as follows:

1. **CONTRACT PERIOD**

This Agreement shall begin on the date the NOTICE TO PROCEED is issued by **COUNTY**. All work phases specified herein must be completed no later than one hundred twenty (120) calendar days from the effective date of the Notice to Proceed. If the **Contractor** fails to satisfactorily complete the work within the specified time, liquidated damages of $250.00 per calendar day shall be assessed up to value of the contract (total bid). The penalty may be drawn from any payment due, or the performance bond, at the discretion of the **County**.

2. **PROJECT SCOPE**

COUNTY has employed **CONTRACTOR** to provide storm drainage improvements on Wintergreen Lane in Greenville County. The services to be provided by **CONTRACTOR** are more particularly described in **COUNTY'S** IFB #28-11/24/16 and in **CONTRACTOR'S** response to IFB #28-11/24/16 received _____, which are both attached hereto and incorporated herein by reference. **CONTRACTOR** acknowledges that it is an independent contractor and that it will at all times act as such. Nothing in this Agreement shall be deemed to constitute **CONTRACTOR** or any of its employees as the agent, representative or employee of **COUNTY**, or create a joint venture between the parties.

3. **PAYMENT TERMS**

3.1 **COUNTY** agrees to pay **CONTRACTOR** for the services described in the Project Scope an amount not to exceed _____.

3.2 **CONTRACTOR** will submit monthly invoices to the **COUNTY**. Such invoices shall include a detailed listing of charges. **COUNTY** shall notify **CONTRACTOR** within ten (10) days of receipt of invoice of any dispute with the invoice and **CONTRACTOR**, upon such notice, shall provide back-up data to **COUNTY**. **COUNTY** and **CONTRACTOR** will, thereafter, promptly resolve any disputed items. Payment on undisputed invoice amounts is due upon receipt of invoice by **COUNTY** and is past due thirty (30) days from the date the invoice is received. If payment on undisputed invoice amounts remains past due sixty (60) days from the date the invoice is received by **COUNTY**, then **CONTRACTOR** shall have the right to either suspend all work under this Agreement, without prejudice, or terminate this Agreement in

SAMPLE CONTRACT

accordance with the provisions of Section 13.2. **COUNTY** shall, prior to making payment on any invoice, withhold ten (10%) percent from any payment due. The amounts so withheld shall be released to **CONTRACTOR** upon satisfactory completion of the Project.

3.3 Approval and/or payment of such invoices shall not in any way relieve **CONTRACTOR** of its liability to **COUNTY** for deficiencies in the performance of its services. **COUNTY'S** approval or acceptance of, or payment for any of the services shall not operate as a waiver of any rights to which **COUNTY** may be entitled.

3.4 **NO INTEREST OR OTHER LATE PENALTIES SHALL ACCRUE ON LATE PAYMENTS.**

3.5 **IT IS UNDERSTOOD AND AGREED BY THE PARTIES THAT IN THE EVENT FUNDS ARE NOT APPROPRIATED IN THE CURRENT FISCAL YEAR OR ANY SUBSEQUENT FISCAL YEAR, THIS CONTRACT WILL BECOME NULL AND VOID AND THE COUNTY WILL ONLY BE REQUIRED TO PAY FOR SERVICES COMPLETED TO THE SATISFACTION OF THE COUNTY.**

4. **CHANGES**

4.1 **COUNTY** may, at any time, in writing, and within the general scope of this Agreement, make "Request for Changes" in the services or work to be performed. In the event **CONTRACTOR** is requested to perform additional services or work not contemplated by this Agreement, **CONTRACTOR** will promptly notify **COUNTY** if such change causes an increase in **CONTRACTOR'S** cost of, or time required for, performance of any services under this Agreement, an equitable adjustment shall be made and this Agreement shall be modified in writing accordingly. In the event **CONTRACTOR** is requested to reduce the performance of services or scope of work, such request must be in writing. In the event **CONTRACTOR** is requested to reduce the performance of services or scope of work **COUNTY** shall be entitled to a decrease in the amount of compensation to be paid to **CONTRACTOR** accordingly.

4.2 All change orders must be in writing to be valid, and no services for which any additional compensation will be charged by **CONTRACTOR** shall be furnished without the written authorization of **COUNTY**.

4.3 **COUNTY** may add to or reduce the scope of work by generating mutually agreed upon contract exhibits to this basic agreement.

5. **WARRANTIES**

In addition to any express and/or implied warranties provided to **COUNTY** by law, **CONTRACTOR** warrants to **COUNTY** that the performance of the services covered by this Agreement will be competent to perform the tasks undertaken, that the product of such paving services will yield only first-class results, that materials and equipment furnished will be of good quality and new unless otherwise permitted by this Agreement, and that the work will be of good quality, free from faults and defects and in strict conformance with this

SAMPLE CONTRACT

Agreement. All work not conforming to these requirements may be considered defective. In the event any of the work is found to be defective or not in accordance with this Agreement within one (1) year after completion of the contract services, **CONTRACTOR** will promptly correct the work without additional compensation from **COUNTY**, upon written notice from **COUNTY**. All corrective work shall be completed within thirty (30) days of receipt of written notice from **COUNTY**. Establishment of the one year time period in this section relates only to the duty of **CONTRACTOR** to specifically correct the work.

6. **WITHHOLDING PAYMENT**

COUNTY has the right, but not the obligation, to withhold funds to the extent and only to the extent necessary to protect **COUNTY** from loss because of:

a) Defective work not remedied by **CONTRACTOR** within a reasonable time or for which **CONTRACTOR** has failed to initiate a remedy within a reasonable time;

b) Claims of third parties against **COUNTY** or **COUNTY'S** property for which **CONTRACTOR** is liable;

c) Failure by **CONTRACTOR** to pay subcontractors or others in a prompt and proper fashion the amounts due and owing to such subcontractor or others relating to the Project.

d) Evidence that the balance of the work cannot be completed in accordance with this Agreement for the unpaid balance of the Contract Price;

e) Evidence that the work will not be completed in the time required for final completion;

f) Persistent failure to carry out the work in accordance with this Agreement, or

g) Damage to the **COUNTY** or a third party to whom the **COUNTY** is, or may be, liable and for which **CONTRACTOR** is liable pursuant to the terms of this Agreement.

7. **RIGHT TO STOP WORK**

In the event **CONTRACTOR** fails to perform the work in accordance with this Agreement, **COUNTY** may order **CONTRACTOR** to stop the work and **COUNTY** may then perform the work in accordance with Section 8, below, or terminate this Agreement in accordance with Section 13.1.2. In such event, **CONTRACTOR** shall immediately obey such stop work order.

8. **COUNTY'S RIGHT TO PERFORM WORK**

In the event **CONTRACTOR'S** work is stopped pursuant to Section 7, above, entitled "Right to Stop Work", and **CONTRACTOR** fails to provide adequate assurance to **COUNTY**, within seven (7) days of such stoppage, that the cause of such stoppage will be eliminated or corrected, then **COUNTY** may proceed to carry out the subject work or terminate this Agreement. In such a situation, an appropriate Change Order shall be issued deducting from the Contract Price the documented and agreed to cost of correcting the deficiencies, including any professional services and expenses necessitated thereby. If the unpaid portion of the Contract Price is insufficient to cover the amount due **COUNTY**, **CONTRACTOR** shall pay the difference to **COUNTY**; provided, however if **COUNTY** stops
the work, takes over a portion of or all of the work and performs the work, then **CONTRACTOR'S WARRANTY OBLIGATIONS** relating to such work performed by **COUNTY**

SAMPLE CONTRACT

shall be null and void.

9. **INDEMNIFICATION.**

CONTRACTOR agrees to assume responsibility for any damage, loss, or injury, including death, of any kind or nature whatever to person or property, including employees and property of **COUNTY**, caused by or resulting from any negligent act or omission of **CONTRACTOR** or its subcontractors or any of their officers, agents, servants, or employees, arising from the performance of the work under this Agreement. **CONTRACTOR** shall defend, indemnify, and hold harmless **COUNTY** and all of its officers, agents, servants, or employees from and against any and all claims, loss, damage, charge, or expense to which they or any of them may be put or subjected by reason of any such damage, loss, or injury. **CONTRACTOR** expressly agrees to defend against any claims brought or filed against **COUNTY**, where such claim or action involves, in whole or in part, the subject of the indemnity contained herein, whether such claims or actions are rightfully or wrongfully brought or filed.

10. **INSURANCE.**

The contractor is responsible for and must have all required insurance listed below and shall not commence work under the associated contract until it has obtained all insurance required, and the County has approved such insurance in writing, nor shall the Contractor allow any subcontractor to commence work on its subcontract until all similar insurance required of the subcontractor has been obtained. All insurance policies shall be maintained for the life of the contract.

A. **THE COUNTY SHALL BE NAMED AS "ADDITIONAL INSURED" FOR ITS INTEREST** on all policies of insurance, except Worker's Compensation, Auto Liability and Professional Errors and Omissions, regarding ongoing operations, products and completed operations, and this shall be noted on the face of the Certificate of Insurance. As a part of the certificate of insurance requirement the contractor shall also include acknowledgement and acceptance of the wavier of subrogation provision granted to the County of Greenville. This acknowledgement and acceptance should be included in the same section of the Certificate of Insurance that evidences the "Additional Insured" provision.

B. Certificates for all such policies of insurance shall be provided by the **Contractor's** insurance agent or broker to the **County** within 10 working days from the date of Notice of Award.

C. All Certificates of Insurance submitted shall provide on the face of the certificate reference to County's IFB #28-11/24/16.

D. **Contractor** will provide **County** a minimum of 30 days advance notice in the event the insurance policies (or an insurance policy) is canceled.
Subcontractors approved to perform work on this project are subject to all of the requirements in this Section.

E. **Contractor** agrees to maintain and keep in force during the life of this Agreement, with

SAMPLE CONTRACT

a company or companies authorized to do business in South Carolina, the following insurance policies:

Comprehensive General Liability:
1,000,000 per occurrence - combined single limit / $2,000,000 general aggregate, to include products and completed operations.

Automobile Liability:
$1,000,000 per occurrence - combined single limit (Coverage shall include bodily injury and property damage and cover all vehicles including owned, non-owned and hired)

Statutory Worker's Compensation:
Coverage A - State of SC
Coverage B - Employers liability
$1,000,000 Each Accident
$1,000,000 Disease, Per Employee
$1,000,000 Disease, Policy Limit
Policies shall contain a waiver of subrogation in favor of and/or that applies to the County of Greenville, its departments, agencies, boards, employees, and commissions for losses from work performed by or on behalf of the contractor.

No deviation from these coverages will be accepted unless, in the County's sole discretion, it is more advantageous to the County, i.e., $1,000,000 - a $2,000,000 or $5,000,000 limit would be acceptable.

11. **PERFORMANCE AND PAYMENT BOND**

Contractor shall furnish a satisfactory Performance and Payment Bond in the amount of the total contract price no later than fifteen (15) business days after the date of the Notice of Award. The Bond must have approval by the County Attorney's Office before it is made effective. The **Contractor** shall have as surety a corporate surety authorized to act as surety in South Carolina. The Performance and Payment Bond shall remain in effect for one year after completion of the contract.

12. **ILLEGAL IMMIGRATION REFORM ACT COMPLIANCE**

By submitting an offer, **Contractor** certifies that it will comply with the applicable requirements of Title 8, Chapter 14 of the South Carolina Code of Laws (originally enacted as Section 3 of The South Carolina Illegal Immigration Reform Act , 2008 S.C. Act No. 280) and agrees to provide upon request any documentation required to establish either: (a) the applicability of Title 8, Chapter 14 to **Contractor** and any subcontractors or sub-subcontractors; or (b) the compliance with Title 8, Chapter 14 by **Contractor** and any subcontractor or sub-subcontractor. Pursuant to Section 8-14-60, "A person who knowingly makes or files any false, fictitious, or fraudulent document, statement, or report pursuant to this chapter is guilty of a felony and upon conviction, must be fined within the discretion of the court or imprisoned for not more than five years, or both." **Contractor** agrees to include in any contracts with its subcontractors language requiring the subcontractors to (a) comply with the applicable requirements of Title 8, Chapter 14, and (b) include in any contracts with the sub-

SAMPLE CONTRACT

subcontractors language requiring the sub- subcontractor to comply with the applicable requirements of Title 8, Chapter 14. In the event any contractor, subcontractor and/or sub-subcontractor is found not to be in compliance with the SC Immigration Reform Act [hereinafter "The Act"], the contractor agrees to fully indemnify the County for any loss suffered by the County as a result of such contractor, subcontractor or sub-subcontractor's failure to comply with the Act.

13. TERMINATION

13.1 TERMINATION BY COUNTY

13.1.1 This Agreement may be terminated by **COUNTY** upon fifteen (15) days written notice at **COUNTY'S** election. In the event of termination at **COUNTY'S** election and not due to the fault of **CONTRACTOR**, **CONTRACTOR** will be paid only for the work actually completed to the satisfaction of the **County** as of the date of termination.

13.1.2 Should **CONTRACTOR** default or persistently fail or neglect to carry out the work in accordance with the terms of this Agreement, **COUNTY** may by written notice to **CONTRACTOR**, without prejudice to any other right or remedy under this Agreement, terminate the employment of **CONTRACTOR** and take possession of the site and all materials, equipment, tools and construction equipment and machinery thereon owned by **CONTRACTOR** as well as all drawings, plans and specifications and finish the work by whatever methods **COUNTY** may deem expedient; provided, however, prior to such termination, **CONTRACTOR** shall be given notice of the default and an opportunity to cure such default within seven (7) days. Such termination shall be deemed "for cause". Should this Agreement be terminated "for cause", **CONTRACTOR** shall not be entitled to any further payment. In the event the actual and documented cost of finishing the work, including compensation for professional services and expenses made necessary thereby, if any, exceed the unpaid balance, **CONTRACTOR** shall pay the difference to **COUNTY**. This obligation for payment shall survive the termination of this Agreement.

13.2 TERMINATION BY CONTRACTOR

Should **COUNTY** fail to make payment on any undisputed invoice amount within sixty (60) days of receipt of such invoice, **CONTRACTOR** may elect to either suspend the work or terminate this Agreement; provided, however, prior to termination, **COUNTY** shall be given notice of the default and an opportunity to cure such default within seven (7) days. Should this Agreement be terminated by **CONTRACTOR**, **CONTRACTOR** shall be entitled to be paid only for the work actually completed to the satisfaction of the **County** as of the date of termination.

14. CLEANING THE SITE AND SAFETY

14.1 **CONTRACTOR** shall keep the site reasonably clean during performance of the work. **CONTRACTOR** shall dispose of all refuse at a South Carolina DHEC approved

SAMPLE CONTRACT

landfill.

14.2 **CONTRACTOR** shall take reasonable precautions for safety of, and shall provide reasonable protection to prevent damage, injury or loss to (1) employees on the job and other persons who may be affected thereby; (2) the work and materials and equipment to be incorporated herein; and (3) other property at or adjacent to the site.

14.3 **CONTRACTOR** shall give notices and comply with all laws, ordinances, rules, regulations and orders of public authorities bearing on the safety of persons and property and their protection from damage, injury or loss.

15. **ASSIGNMENT**

This Agreement shall not be assigned by either party without the prior written consent of the other party.

16. **SUBCONTRACTS**

16.1 **CONTRACTOR** shall promptly furnish to **COUNTY**, in writing, the bid list proposed by **CONTRACTOR** to act as subcontractors on the Project. **COUNTY** shall, within seven (7) days, reply to **CONTRACTOR**, in writing, stating any objections **COUNTY** may have to such proposed subcontractors. **CONTRACTOR** may enter into a subcontract with any subcontractor on the approved bid list. **CONTRACTOR** shall not be required to enter into a subcontract with any subcontractor to whom **CONTRACTOR** has objection.

16.2 All subcontractors shall provide performance and payment bonds in accordance with bonding requirements set forth in the Greenville County procurement policies and shall name **COUNTY** as an additional obligee on such bonds.

16.3 All subcontractors will be required to furnish Certificates of Insurance to the **County** in accordance with all of the requirements set forth in Section 10 of this Agreement.

17. **NOTICES**

All notices made pursuant to this Agreement shall be in writing and delivered personally or sent by registered or certified mail, return receipt requested, to the parties at their respective addresses set forth below:

COUNTY
Nadine Chasteen, CPPO, CPPB
Director
County of Greenville
Procurement Services Division
301 University Ridge, Suite 100
Greenville, SC 29601

CONTRACTOR

Any party may change the person to whom notices are to be sent by giving ten (10) days

SAMPLE CONTRACT

written notice of such change to the other party.

18. **APPLICABLE LAW AND VENUE**

18.1 The construction, interpretation and performance of this Agreement shall be governed by and construed in accordance with the laws of the State of South Carolina.

18.2 **CONTRACTOR** and **COUNTY** further agree that this Agreement shall be deemed to have been made and performed in Greenville County, South Carolina. For the purposes of venue, all suits or causes of action arising out of this Agreement shall be brought in the courts of Greenville County, South Carolina.

19. **COMPLIANCE WITH FEDERAL, STATE AND LOCAL LAWS**

CONTRACTOR shall comply with all federal, state and local statutes, ordinances and regulations, and shall obtain all permits that are applicable to this Agreement.

20. **SUCCESSORS AND ASSIGNS**

CONTRACTOR and **COUNTY** each binds itself and its partners, successors, executors, administrators and assigns to the other party of this Agreement and to the partners, successors, executors, administrators, and assigns of such other party, in respect to all covenants of this Agreement.

21. **SEVERABILITY**

Should any section, paragraph, clause, phrase, or provision of this Agreement be adjudged invalid or held unconstitutional by a court of competent jurisdiction, such declaration shall not affect the validity of this Agreement as a whole or any part or provision thereof, other than the part so decided to be invalid or unconstitutional.

22. **ENTIRE AGREEMENT**

This Agreement, along with the provisions contained in **COUNTY'S** IFB #28-11/24/16, and **CONTRACTOR'S** RESPONSE TO IFB #28-11/24/16, attached hereto, represents the entire agreement between the parties and supersedes any and all prior agreements, whether written or oral, that may exist between the parties regarding same. If there is a conflict between any of the terms of these contract documents the order of precedence of these contract documents shall be:

A. Any Change Order or Amendment signed and executed by the parties;
B. This Agreement;
C. **CONTRACTOR'S** RESPONSE TO IFB #28-11/24/16
D. Addenda to **COUNTY'S** IFB# 28-11/24/16
E. **COUNTY'S** IFB #28-11/24/16.

SAMPLE CONTRACT

IN WITNESS WHEREOF, the parties hereto have executed this Agreement as of the date hereinabove written.

WITNESSES:

_____

_____

CONTRACTOR

By: _____

Its: _____

COUNTY

By: _____
Bob Taylor, Chairman
Greenville County Council

By: _____
Joseph M. Kernell
County Administrator

ATTEST:

_____
Theresa B. Kizer, c.c.c.
Clerk to Council

SAMPLE CONTRACT

Greenville County Public Works Division

Standard Specifications

Merrifield Park Drainage Improvement Project

Prepared by:

Greenville County Public Works
301 University Ridge, Suite 3800
Greenville, SC 29601
(864) 467 - 7017

RELATED DOCUMENTS: Attention is directed to related sections of the Specifications, as they pertain to to the guidelines, materials, and methods described in this section. Also, the General Provisions and Special Provisions of the Contract shall apply to all Sections of the Work.

1.0 SCOPE

a. General: This section includes furnishing all labor, materials, equipment, and all services necessary for any clearing, and/or clearing and grubbing required within the areas of operation.

b. Traffic Control: The Contractor shall be responsible for conducting all work in streets, roads and highways in accordance with any and all Regulatory Authorities current requirements. As a minimum, for any work in State Highways, the Contractor shall meet the requirements of Traffic Controls for Street and Highway Construction Part V of the South Carolina Manual on Uniform Traffic Control Devices for Streets and Highways - 1982, latest revision.

2.0 CLEARING AND GRUBBING

a. Clearing - On all areas where grading, excavating and filling are to be done, and on all border areas, clearing shall consist of cutting, removal and disposal of all trees, brush, debris and other objectionable material resting on or protruding above ground within the limits of grading.

b. Grubbing - Grubbing shall consist of the removal and disposal of stumps, roots, and other objectionable organic material within the limits of grading. Stumps shall be removed entirely. Roots and matted roots shall be grubbed out at least 18 inches below the existing surface.

c. Disposal of Materials - All materials removed as a result of clearing and grubbing operations shall be removed from and disposed of off-site.

d. Trees - Those trees that are indicated to be saved shall be carefully protected during grading operations. If the trees are damaged or destroyed due to the Contractor's negligence, they will be replaced at the fair market value determined by the County Engineer and paid for by the Contractor.

3.0 CERTIFICATION

The clearing and grubbing operations shall be certified by the County Engineer prior to rough grading, filling, or as required by Local Government Agencies.

END OF SECTION

RELATED DOCUMENTS: Attention is directed to related sections of the Specifications, as they pertain to the guidelines, materials, and methods described in this section. Also, the General Provisions and Special Provisions of the Contract shall apply to all Sections of the Work. For the purpose of these specifications, the "County Engineer" shall mean the County Engineer or the County Engineer's representative, which shall include the County project manager, project inspector, or private testing firm hired by the County to oversee the earthwork operations.

1.0 SCOPE

a. General: This section includes furnishing all labor, material, equipment, and all services necessary to complete the earthwork within the project site including but not limited to road right-of-way, trenches, fill and/or cut slopes as shown on the drawings and as herein specified. The scope of the project shall include but not be limited to the following:

1. Clearing and grubbing.

2. Backfilling and compaction.

3. Demolition of areas shown on drawings including but not limited to concrete, asphalt, walls, structures and pipe.

4. Provide and place any additional material if needed, to bring existing grades to new grades.

5. Temporary drainage of site.

6. Rock removal and replacement.

7. Trenching for utilities and drainage.

b. Contractor Verification: The Contractor shall visit the job site prior to the submission of the proposal to verify the actual conditions with those shown on the working drawings.

c. Limitations & Tolerances: Excavation and earthwork under this contract will be limited to rough grading the subgrade of roads in accordance with plans, details and specifications. Rough grading shall be within 0.1' (one-tenth of a foot) plus or minus making allowances for topsoil, road surfacing, etc.

d. Notification of Project Start: The Contractor shall notify the County Engineer seven (7) days prior to the beginning of grading operations.

e. Stockpiling of Topsoil: Topsoil shall be removed to its entire depth from all areas to be filled, excavated, or used for borrow and stockpiled at convenient locations approved by the County Engineer.

f. Maintenance of Reference Points: All reference points, property markers, right- of-way markers, etc., shall be carefully maintained. If disturbed or destroyed, the Contractor shall accurately replace same at his expense.

g. Protection of Existing Utility Lines: Existing utility lines shall be protected from damage during construction operations, and shall be repaired to the satisfaction of the Utility and County Engineer at the Contractor's expense, if damaged.

h. Traffic Control: The Contractor shall be responsible for conducting his work in streets, roads, and highways in accordance with the requirements of the applicable Regulatory Authorities. As a minimum, for any work in State Highways, the Contractor shall meet the requirements of Traffic Controls for Street and Highway Construction and Maintenance Operations, Part V of the South Carolina Manual on Uniform Traffic Control Devices for Streets and Highways - 1982, latest revision.

2.0 TESTING

a. Scheduling and Coordination: The Contractor shall arrange for soil compaction testing to be performed by an independent Geotechnical testing firm at the contractor's expense for any areas which are deemed questionable by the County Engineer.

b. Proof-rolling: Prior to paving, the Contractor shall proof-roll the roadway in the presence of the County Engineer. A fully loaded tandem dump truck or water truck shall be used to identify any unstable areas of base material. The unstable base material shall be promptly removed, replaced with suitable material, and recompacted until the proof-roll is satisfactory.

c. Additional Testing: Additional tests will be paid for by the Contractor for materials which do not meet the specifications.

3.0 STRIPPING

a. General Requirements: The entire area within the limits of grading shall be excavated to a depth sufficient to remove all vegetable matter, sod, muck, rubbish and other unsuitable material. Topsoil material from stripping operations shall be placed separate from other excavated materials and piled free of roots, stones, and other undesirable material for use in fine grading operations.

4.0 STOCKPILING TOPSOIL

a. General Requirements: Topsoil shall be removed to its entire depth from all areas to be filled, excavated, or used for borrow and stockpiled at convenient locations approved by the County Engineer.

5.0 PLACING TOPSOIL

a. General Requirements: Topsoil shall be placed on all shoulders, slopes, ditches and other earth areas to be grassed after grading. Topsoil shall be placed uniformly to a compacted depth of not less than 4". Soil material shall be free from clods, rocks, roots and other objectionable materials which might hinder subsequent grassing and mowing operations.

6.0 PREPARATION OF GROUND SURFACE FOR FILL

a. General Requirements: Sloped ground surfaces steeper than 1 vertical to 4 horizontal on which fill is to be placed shall be plowed, stepped or benched, or broken up as directed, in such manner that the fill material will bond with the existing surface. Prepared surfaces on which compacted fill is to be placed shall be wetted or dried as may be required to obtain the compaction specified.

7.0 PROOF ROLLING PRIOR TO FILLING

a. General Requirements: After any required clearing, grubbing and stripping of topsoil has been accomplished, and before beginning any earthwork operations, all areas to receive compacted fill, shall be proof rolled to detect any soft areas that may exist. A 4-wheel pneumatic tired roller of not less than 25 tons, or its equivalent, shall be used for this operation. At least 4 passes shall be made, (2) in each of the two directions at right angles. Any soft areas thus disclosed that do not harden up after successive passes of the roller shall be called to the attention of the County Engineer. The County Engineer may require the areas to be under cut and replaced with properly compacted material.

8.0 FILLING

a. Embankments: Approved material removed from the excavation shall be used in forming the fill. Fill material shall be free from roots, other organic material and trash, and from stones having a maximum dimension greater than 6 inches. No frozen material will be permitted in the fill. Soil material for fill shall be placed in successive horizontal layers of not more than 6 inches in loose depth for the full width of the fill embankment cross section. Each layer of fill or embankment shall be compacted by rolling with an approved tamping roller, vibrating roller or other compaction equipment, whichever is best suited for the types of soil encountered.

b. Trenches: Place backfill in not more than 6" thick compacted lifts, except as specified otherwise, and each lift shall be compacted as specified hereinafter. Backfill adjacent to structural elements shall be placed, as far as practicable, as the adjacent structural elements have been completed and accepted. Backfilling against concrete walls shall be done only after the walls have been adequately shored or have cured to sufficient strength to withstand the soil pressure. Backfilling of trenches shall progress as rapidly as the construction, testing and acceptance of the work permits. In backfilling pipe trenches, compact fill in 6" thick compacted lifts to a depth of 12" over the top of the pipe; backfill and compact the remainder of the trench as specified hereinafter. For trenches excavated in paved areas, place the backfill in not more than 6" compacted lifts to the top of the trench. For trenches excavated in unpaved areas place and compact backfill in 12" compacted lifts to the top of the trench.

c. Compaction: Each layer of fill or embankment shall be compacted to not less than 95% of maximum density at optimum moisture content. The upper 18" of fill under roads shall be compacted to 100% of this Specification.

1. The method of test for maximum density shall be in accordance with ASTM D-698 (Standard Proctor Test). The material to be compacted shall be of the proper moisture content to obtain the prescribed density. Wetting or drying of the material and manipulation to secure a uniform moisture content throughout each layer will be required.

2. When compaction is suspended for several days, before resuming operations, the existing soil surface shall be plowed if deemed necessary by the County Engineer. No allowance in payment will be made for this plowing.

9.0 FIELD CONTROL OF FILLING OPERATIONS

a. Testing: The Contractor shall retain the services of an independent testing laboratory to perform all tests required under this section. In areas where the density of the fill or embankment is specified, field density tests shall be performed in sufficient number to insure that the specified density is being obtained. Areas of the site in which testing reveals compaction below the specified density as stated hereinbefore shall be reworked by the

Contractor until satisfactory to the County Engineer. The cost of the initial test shall be paid for by the Contractor unless other arrangements have been made; and subsequent tests required as a result of improper compaction shall be paid for by the Contractor.

10.0 EXCAVATION

a. General Requirements: Excavation of every description regardless of material encountered within the grading limits of the project shall be performed to the lines and grades indicated or necessary. Suitable excavated material shall be transported to and placed in fill areas within limits of the work. Surplus excavation material not required for fill shall become the responsibility of the Contractor and shall be removed from the site or disposed of as directed by the County Engineer. The construction, excavation and filling shall be performed in a manner and sequence that will provide drainage at all times. When required, the Contractor shall provide temporary drains, ditches, pumps, drainage lines, or other equipment to intercept, divert, or remove water which may affect the prosecution or condition of the work. Water shall be removed from the site to the satisfaction of the County Engineer.

b. Classification: Excavation shall pertain to cuts and fills, and shall be classified as one of the following: site excavation, muck excavation, borrow excavation, stripping, surplus excavation, water course and ditch excavation, and rock excavation. Site excavation, stripping, surplus excavation, and water and ditch excavation shall be included in the unit prices for various other pay items, but will not be considered as individual pay items. Borrow excavation, muck excavation, and rock excavation will be treated as individual pay items. Rock excavation shall be such material which cannot be removed by means other than by explosives or air hammers. Materials which can be removed by ripping shall not be considered rock excavation. Classification of excavation which is disputed shall be determined by the County Engineer. It shall be the Contractor's responsibility to notify the County Engineer when rock excavation or muck excavation is encountered.

c. Notification for Rock Excavation: It shall be the Contractor's responsibility to notify the County Engineer when rock excavation is encountered. The Contractor will not be credited for any rock quantities removed before such notice is given. The County inspector must measure rock quantities before the excavation is backfilled in order for credit to be given and payment to be made.

d. Insurance for Blasting: If conditions are such that blasting or any use of explosives is required, the Contractor, prior to blasting, shall submit to the County Engineer satisfactory evidence of blasting and explosive insurance in the amounts of bodily injury and property damage insurance required in the Special Conditions and shall provide to the satisfaction of the County Engineer the experience and capability of the Contractor's organization to safely handle and perform such operations.

e. Qualifications and Safety for Blasting: Handling and storing of blasting materials shall be performed only by qualified persons skilled in such work. Adequate precautions shall be taken to prevent accidents, injury to persons or damage to property. Qualifications of blasting operation personnel and safety precautions shall be in full compliance with all codes governing such operations and shall be approved by the County Engineer. Full responsibility for all blasting operations shall remain with the Contractor, and he shall make good any damage that may result.

f. Trenches: Excavate for trenches to depth indicated or required to establish indicated flow lines or invert elevations. Maintain uniform width required for particular item to be installed, including width to provide adequate working room and compaction or as directed by the Engineer. Rock shall be excavated to a depth of 6 inches below the invert and 12 inches on each side of all structures or utilities.

11.0 EXCESS MATERIAL AND BORROW

a. Disposal of Excess Material: Any excess material from excavation shall be disposed of by the Contractor at the Contractor's expense.

b. Dumped Material: The dump shall be uniformly piled, with top flattened and edge sloped to present a neat appearance and permit drainage. Silt fencing shall be installed around the stockpile as necessary for erosion and sedimentation control.

c. Approval of Fill Material: The Contractor shall furnish all material required for fill work. Fill material shall be approved by the County Engineer prior to filling operations.

d. Offsite Borrow: When necessary to borrow material for filling, the Contractor shall obtain fill material from offsite unless directed otherwise by the County Engineer.

12.0 GRADING

a. General Requirements: Grading of all areas within the project including excavated and fill sections and adjacent transition areas shall be reasonably smooth, compacted and free from irregular surface changes. The Contractor shall protect newly graded areas from action of the elements. Any settlement or washing which occurs prior to acceptance of the work shall be repaired and grades re-established to required elevations and slopes. Fill to grade levels any areas where settlement occurs. This fill material shall be placed in accordance with the articles as previously described.

b. Spreading of Topsoil: Topsoil shall be uniformly spread to a minimum depth of 4" over all earthen areas disturbed during construction.

13.0 DRAINAGE

a. General Requirements: Drainage, both temporary and permanent, shall be constructed and maintained during the performance of the work. Existing drains, culverts, and ditches not interfering with new work shall be kept clean and operating during construction operations. The surface of unfinished fills shall be bladed smooth to a crown or grade at the conclusion of the day's work or before shutdown for any cause to permit water runoff. Fill that has become saturated with water because of improper drainage shall be removed to a depth determined by the County Engineer. Such saturated fill shall be disposed of as directed by the County Engineer, or reconditioned to conform to these specifications. The Contractor shall control grading so that ground is pitched to prevent water from running into excavated areas and provide all pumping required to keep excavated areas free of water. Should springs or running water be encountered in excavation, the County Engineer shall be notified immediately. The Contractor shall provide free discharge of such water by providing trenching which shall drain to an appropriate point of disposal.

14.0 REMOVAL AND DISPOSAL OF UNSUITABLE MATERIAL

a. Definition: Unsuitable material shall be defined as any muck material or other objectionable excavated material which is deemed unsatisfactory for road construction purposes or pipe backfill, based on the judgment of the County Engineer. Unsuitable material does not include stripping from clearing and grubbing operations or other excavated materials not intended for roadway fill or pipe backfill.

b. Removal and Disposal: Removal of unsuitable material shall include complete removal and disposal. If directed by the Engineer, unsuitable materials may be blended with suitable soils and used for non-structural fill in approved areas. All organic and otherwise objectionable materials removed as a result of stripping and removal of unsuitable material not intended for road construction or pipe backfill as described in this section shall become the responsibility of the Contractor and shall be removed without charging as muck excavation.

16.0 SUBGRADE ELEVATIONS

a. Finished Elevations: The grading elevations shown on the drawings are finished elevations.

b. Roadway Subgrade Elevations: In roadway sections, the subgrade elevations will be below finished elevations by the thickness of the paving.

17.0 EROSION AND SEDIMENTATION CONTROL

a. General Requirements: Erosion and sedimentation control measures as shown on the drawings or as required by local ordinances shall be installed and operational prior to starting any work on the project site.

END OF SECTION

RELATED DOCUMENTS: Attention is directed to related sections of the Specifications, as they pertain to to the guidelines, materials, and methods described in this section. Also, the General Provisions and Special Provisions of the Contract shall apply to all Sections of the Work.

1.0 SCOPE

a. General: The work includes the provision of temporary erosion control measures to prevent the pollution of air, water, and land. Installation of temporary erosion control features shall be coordinated with the construction of permanent erosion control features to assure effective and continuous control of erosion.

2.0 CONSTRUCTION

a. Gravel Construction Entrance: Provide as indicated, a minimum of 6 inches thick, at points of vehicular entrance and exit on the construction site. Gravel shall be as specified in S.C. Highway Department, "Standard Specifications for Highway Construction", Section 305 for Composite Mixture Macadam Base Course.

b. Dust Suppression: ASTM D-98 calcium chloride, magnesium chloride, or other standard manufacturer's products designed for dust suppression. Apply dust suppressors in accordance with manufacturer's instruction. Protect treated surfaces from traffic for a minimum of 2 hours after treatment. Repeat application of dust suppressors as required to control dust emissions.

c. Sediment Fence: Install posts at the spacing indicated, and at an angle between 2 degrees and 20 degrees towards the potential silt load area. Do not attach filter fabric to existing trees. Secure filter fabric to the post and wire fabric using staples, wire, or hog rings. Imbed the filter fabric into the ground as indicated. Splice filter fabric into the ground as indicated. Splice filter fabric at the support pole using a 6 inch overlap and security seal. Top of the filter fabric shall have a 1 inch tuck or a reinforced top end section. Preassembled silt fences may be used as approved by the County Engineer.

1. Posts: 4 inch by 4 inch wood posts, minimum 3 inch diameter wood, or 1.33 pound per linear foot steel posts. Posts shall be minimum 5 feet long.

2. Wire Fabric: ASTM A-185, 6 by 6, minimum 14 gage.

3. Filter Fabric: A woven or nonwoven polypropylene, nylon, or polyester containing stabilizers and/or inhibitors to make the fabric resistant to deterioration from ultraviolet light. Filter cloth shall be of the type recommended by its manufacturer for the intended application.

4. Straw Bales: Constructed from grain straw or hay with each bale bound together with binding wire or twine. Posts shall be ASTM A-615, 1-1/2 inch diameter wood posts or 1.0 pound per linear foot steel posts. Imbed the bottom row of bales in a 4 inch deep trench and place straw bales tightly abutting each other. Bales shall be placed so the bindings are horizontally oriented around the bales, wire adjoining bales together. Anchor each bale with two stakes, driving the first stake towards the previously laid bale. Wedge straw in gaps between bales. After the bales are staked, the excavated soil from the trench shall be backfilled against the straw bales to ground level on the downhill side and to 4 inches above ground level on the uphill side.

d. Gravel Dam and Silt Trap: Provide as indicated, adjusting dimensions as directed by the County Engineer to fit grading and location.

1. Riprap: SCHD "Standard Specifications for Highway Construction", Section 804, Stone for Hand Placed Riprap and ranging in size from 3 inches to 6 inches.

2. Filter Stone: #5 Washed Stone.

e. Erosion Control Matting: Jute, excelsior, straw, or paper matting that has not been bleached or dyed. Provide matting in minimum 4 foot widths. Staples for anchoring the matting shall be minimum throat width of 1 inch minimum length of 6 inches after forming. Place matting in the direction of the flow of water. The up channel matting end shall be placed in a narrow trench a minimum of 5 inches deep. Where one roll of matting ends and a second roll begins, the end of the upper roll shall be brought over the buried end of the second roll to provide a 6 inch overlap. Where matting widths are laid side by side, the overlap between matting shall be 4 inches. Provide check slots every 50 feet longitudinally in the matting. Construct check slots by providing a narrow trench 5 inches deep and folding the matting down into the trench, across the bottom of the trench, and then back up the trench to the existing ground. Backfill and compact the trench using the excavated material from the trench. Staple matting ends, junctions, and check slots at 10 inches on center. Staple matting outer edges, overlaps and the center of each matting strip at 3 feet on center. Install excelsior matting with the woven fabric on top.

f. Temporary Seeding: Within 48 hours after attaining the grading increment specified herein, provide seed, fertilizer, and mulch on graded areas when any of the following conditions occur:

1. Grading operations stop for an anticipated duration of 30 days or more.

2. Provide on the slopes of cuts and fill slopes for every 5 foot increment of vertical height of the cut or fill.

3. When it is impossible or impractical to bring an area to finish grade so that permanent seeding operations can be performed without serious disturbance from additional grading.

4. When an immediate cover is required to minimize erosion, or when erosion has occurred.

5. Provide on erosion control devices constructed using soil materials.

g. Temporary Seeding Operations: Temporary seeding operations shall consist of the following:

1. Procedure: Loosen subgrade to a minimum depth of 4 inches. Uniformly apply the seed, fertilizer, and mulch at the specified rates. Roll the seeded area after applying seed and fertilizer. Do not seed or fertilize when the County Engineer determines conditions are unfavorable. Provide water to promote turf growth.

2. Seed: Provide certified seed type and quantity (pounds per acre) as follows:

SEED TYPE	MAY 1 - SEPT. 1	SEPT. 1 - MAY 1
Annual Rye	100 lbs/Ac	150 lbs/Ac
Common Bermuda	50 lbs/Ac	---

3. Fertilizer: Apply 10-10-10 fertilizer at the rate of 1000 pounds per acre.

4. Mulch: Spread hay or straw mulch at the rate of 1.5 tons per acre and anchor by crimping mulch with a disc. Provide in an air dried condition for placement with commercial mulch blowing equipment.

5. Alternate Bid: Temporary seeding shall be bid as an alternate bid item to be provided only as required above.

h. Maintenance and Inspection: Inspect erosion control devices after each rainfall and daily during prolonged rainfall. Remove sediment deposits after each rainfall or when sediment reaches approximately one-half the barrier height or storage capacity. Immediately repair damaged erosion control devices and damaged areas around and underneath the devices. Maintain erosion control devices to assure continued performance for their intended function. Modify the erosion control plan as required to control problem areas noticed after each inspection.

i. Clean Up: At the completion of the job, or when directed by the County Engineer, erosion control devices shall be removed. Erosion control devices and areas immediately adjacent to the device shall be filled (where applicable), shaped to drain and to blend into the surrounding contours, and grassed or landscaped as specified.

END OF SECTION

1.0 SCOPE

General: This section consists of furnishing all labor, material, equipment required to complete placing protective coatings of geotextile fabric, filter material and broken stone rip rap in the locations and to the lines, grades and thickness shown on the drawings or as specified herein.

2.0 MATERIALS

a. Stones shall be hard quarry or fieldstone and shall be such quality that they will not disintegrate on exposure to water or weathering. The stone shall be suitable in all respects for the purpose intended.

b. Stone for hand placing to a thickness of 12 inches shall range in weight from a minimum of 25 pounds to a maximum of 150 pounds. At least 50 percent of the stone pieces shall weigh more than 60 pounds. The stone pieces, except spalls shall have a minimum dimension of at least 12 inches.

c. Stone for hand placing to a thickness of 6 inches shall be no less than 3 inches in one dimension and no less than 6 inches in another dimension.

d. Geotextile fabric shall be Mirafi 700X or approved equal.

e. Filter material shall consist of a pit run mixture of sand and gravel (or crushed stone) reasonably well graded from ¼ inch to 2-1/2 inches except that between 5 and 15 percent will be required to pass the No. 4 sieve.

3.0 INSTALLATION

a. Install geotextile fabric per manufacturer's recommendations under all areas to receive riprap.

b. Filter material shall be spread uniformly on the prepared sub grade surface to the depth specified. Compaction of filter layers is not required but the surface shall be finished reasonably free of mounds, dips or windrows.

c. Rip Rap shall be placed according to the following specifications:

1. The thickness of hand placed rip rap shall be no less than specified, measured perpendicular to the slope. When the thickness is not specified on the plans, it shall be 12 inches.

2. The width of placed riprap shall be five (5) feet each side of the pipe or ditch centerline unless otherwise shown on the drawings.

3. The Contractor shall fill and compact depressions in trimming and shaping the slope. Begin placing in a trench at least 2 feet below the toe of the slope, measured along the slope, unless otherwise shown on the plans. Progress upward with each piece being placed by hand perpendicular to the slope. Firmly embed riprap against the slope and the adjoining piece. Fill spaces between the larger pieces with spalls of suitable size and thoroughly ram into place. The finished surface shall present an even, tight surface true to line, grade and section.

4.0 MEASUREMENTS AND PAYMENT

a. General: Payment shall constitute full compensation for all labor, equipment, materials, and all other necessary and indicated to the completion of the work. Geotextile filter fabric and filter material shall be considered part of the materials.

b. Unit Price Contracts: Where specific unit prices have been established in the contract, measurement for each type of riprap placed shall be based on the square yards of coverage area after placement. Payment shall be based on the unit price bid.

   Any additional riprap required to repair areas disturbed by the contractor operations or outside of the required lines and grades shall be at the Contractor's expense.

c. Lump Sum Contracts: Where specific lump sum prices are established in the contract, payment shall be made at the unit contract lump sum price based upon percent of work completed.

END OF SECTION

RELATED DOCUMENTS: Attention is directed to related sections of the Specifications, as they pertain to to the guidelines, materials, and methods described in this section. Also, the General Provisions and Special Provisions of the Contract shall apply to all Sections of the Work.

1.0 SCOPE

a. General: Work consists of providing all materials, labor and equipment required for complete installation of asphaltic pavement including subgrade preparation, base and surface courses, extruded concrete curb or curb and gutter with backfill, all as indicated on the drawings and/or specified herein.

b. Replacement of Existing Pavement: The Contractor shall furnish all labor, materials, equipment, services and duties to replace and restore all existing pavements in streets, highways, paved shoulders, driveways or parking areas that are removed, destroyed or damaged by construction. Pavement replacement includes base course replacement as shown on the standard details.

c. Replacement of Existing Curbs, Gutters, and Sidewalks: The contractor shall furnish all labor, materials, equipment, services and duties to replace and restore all existing curbs, gutters, and sidewalks that are removed, damaged or destroyed by construction.

d. Standards for Replacement: In addition to other requirements of the Contract Documents, all removal and replacement of pavements, sidewalks, curbs and gutters in state, city and county roads shall comply with all requirements and provisions of the South Carolina Highway Department or the Local City or County Engineer's Office, as applicable. All such work shall be subject to inspection and approval by the South Carolina Highway Department or the Local City or County Engineer's Office.

e. Traffic Control Requirements: The Contractor shall be responsible for conducting all work in street, roads, and highways in accordance with any and all Regulatory Authorities' current requirements. As a minimum, for any work in State Highways, the Contractor shall meet the requirements of Traffic Controls for Street and Highway Construction and Maintenance Operations, Part V of the South Carolina Manual on Uniform Traffic control Devices for Streets and Highways - 1982, latest revision.

2.0 APPLICABLE PUBLICATIONS

The latest editions of the following publications apply to the specifications to the extent indicated by references thereto:

a. South Carolina State Highway Department Standard Specification for Highway Construction (SCSHDSSHC).

3.0 SUBGRADE PREPARATION

a. Preparation: Prior to constructing the base course, the subgrade shall conform to the grades indicated on the drawings and any holes, ruts or depressions shall be filled with approved material and compacted to requirements of SCSHDSSHC.

b. Frame, Cover, & Box Adjustment: The adjustment of water valve boxes and manhole frames and covers to grade to conform to the finished street grade and cross section shall be as follows:

1. Water Lines: Utility Contractor shall be responsible for setting all valve boxes to the proper height (finished grade of pavement) one time after base course has been placed. Valve boxes shall be set on a firm brick foundation a maximum of 24 hours prior to placement of finished surface course of the pavement. Any resetting of boxes, thereafter, shall be performed by the Paving Contractor at the time he applies the finished surface course. Any damage to water lines, valves, blow-offs or fire hydrants after the final setting of valve boxes by the Utility Contractor, shall be repaired or replaced by the Utility Contractor. It shall be the responsibility of the Utility Contractor to determine what caused the damage and recover any repair costs from the responsible party. Repair costs shall not be paid by the Owner.

2. Sanitary Sewer Lines: Manholes and/or appurtenance may be set to finished grade any time after base course has been placed and shall remain the responsibility of the Utility Contractor. should a manhole and/or appurtenance be damaged after being set, it shall be the Utility Contractor's responsibility to repair or replace the manhole and/or appurtenances to finished grade. It shall be the responsibility of the Utility Contractor to determine what caused the damage to the manhole and/or appurtenance and recover any repair costs from the responsible party. Repair costs shall not be paid by the Owner.

c. Certification: The subgrade shall be certified as required, by the Engineer prior to constructing base course.

4.0 BASE COURSE

a. Stabilized Aggregate Base Course (with Primer): The base course thickness shall be as indicated on the drawings of stabilized aggregate base course Type 2, with MC-30 prime, when indicated, conforming to the requirements of Section 306, of the SCSHDSSHC except the entire paragraphs 306.15, 306.16, and 306.17 shall not apply.

b. Hot Laid Asphaltic Aggregate Base Course: The base course compacted thickness shall be as indicated on the drawings conforming to the requirement in Section 310 of the SCSHDSSHC except the entire paragraph 310.07 shall not apply. Minimum Marshall stability shall be 1,000 pounds.

c. Tack Coat: A tack coat shall be applied prior to the surface course when the asphalt aggregate base course is used. The application of the tack coat shall be as specified in subsection 401.22 of the SCSHDSSHC.

d. Certification: Regardless of the type base course used, the Engineer shall certify, as required, before and after all prime and sealer applications.

5.0 SURFACE COURSE

a. Thickness: The surface course shall be 1-1/2" (with stabilized aggregate base course) or 1" (with asphaltic aggregate base course) compacted thickness of hot laid asphaltic concrete surface course, Type 2, conforming to the requirements of Section 403 of the SCSHDSSHC, except paragraph 403.07 shall not apply.

b. Weather Conditions: The surface course shall be applied in strict accordance with weather restrictions as specified in Section 401, paragraph 401.14 of the same applicable specifications.

c. Joints: where new pavement abuts existing flexible pavement, cut back the existing surface course along uniform lines approximately 12 inches from the edge. Make a vertical cut and

extend cut full depth of the surface course. Prior to placing the surface course, paint the exposed edge of cold joints with a thin layer of bituminous tack coat.

d. Certification: During pavement application, the Engineer shall conduct necessary field observations and complete a "Construction Inspection Certification" and submit a copy to the Greenville County Engineering Department.

6.0 CONCRETE CURBS

a. Concrete Curbs: Concrete curbs shall be constructed as shown on the drawings. The material and installation shall be in accordance with applicable paragraphs of Section 720 of the SCSHDSSHC, and Section 02520.

b. Backfilling Curbs: It shall be the Contractor's responsibility to make sure that stockpiled topsoil is sufficient for backfilling curbs or to reflect any additional backfilling cost in the bid.

c. Throat & Lid Adjustment: The Contractor shall form the concrete curb to the throat of the catch basin and adjust lids and throats of catch basins to provide a 6 inch drainage opening.

7.0 CLEAN UP

a. General Requirements: In addition to other provisions of the Contract Documents, materials, debris, and surplus excavation shall be removed from rights-of-way and work areas. The rights-of-way and work areas shall be left neat, clean and serviceable.

8.0 PROJECT CLOSE OUT

a. General Requirements: The Contractor is responsible for maintaining all sanitary sewer frames and covers and water main valve boxes. Any frames, covers, or valve boxes damaged, displaced, misplaced, lost or broken during the paving operation will be replaced at the Contractor's expense.

END OF SECTION

RELATED DOCUMENTS: Attention is directed to related sections of the Specifications, as they pertain to to the guidelines, materials, and methods described in this section. Also, the General Provisions and Special Provisions of the Contract shall apply to all Sections of the Work.

1.0 SCOPE:

a. General Requirements: The Contractor shall furnish all labor, materials, formwork, equipment, and services required to complete all the concrete work shown on the drawings and specified herein, including all sidewalks, concrete pavements, ramps, and curbs.

2.0 MATERIALS:

a. Delivery and Storage of Materials: Do not deliver concrete until vapor barrier, forms, reinforcement, embedded items, and chamfer strips are in place and ready for concrete placement. Concrete shall be stored so as to prevent deterioration of contamination. Aggregates shall be stored and handled so as to preserve the gradation and cleanliness of the material. Store reinforcement of different sizes and shapes in separate piles on racks raised above the ground to avoid excessive rusting. Protect from contaminants such as grease, oil, and dirt. Provide for accurate identification after bundles re broken and tags removed.

b. Cement: Cement shall conform to the latest revised Standard Specification for Portland Cement, American Society for Testing and Materials, (ASTM) C-150, or Standard Specification for Blended Hydraulic Cements, ASTM C-595. Cement shall correspond to that cement on which the selection of concrete proportions was based.

c. Aggregates: Concrete aggregates shall conform to the latest revised Standard Specifications for Concrete Aggregates, ASTM C-33. Maximum coarse aggregate size shall not be more than onefourth the slab thickness.

d. Water: All mixing water shall be clean and free from deleterious amounts of acids, alkalies, or organic materials.

e. Expansion Joints: xpansion joint material where required shall be 1/2 inch thick asphalt-impregnated premolded fiber conforming to the latest Standard Specification for Preformed Expansion Joint Filler for Concrete, ASTM D-1752.

f. Curing Compound: Curing compound shall conform to the latest revised Standard Specifications for Liquid Membrane-Forming compounds for Curing concrete, ASTM C-309.

g. Admixtures: Air-entraining admixtures for concrete shall conform to the latest revised Standard Specifications for Air-Entraining Admixtures for Concrete, ASTM C-260.

h. Concrete: All concrete shall have a minimum 28-day compressive strength of 3000 psi. Concrete shall be manufactured and delivered in accordance with the latest revised Standard Specification for Ready Mixed Concrete, ASTM C-94.

1. Minimum Cement Content: Concrete shall be produced with a minimum cement content of 520 lbs. per cubic yard and an entrained air content of 6% plus or minus 1-1/2% by volume.

2. Maximum Slump: Maximum allowable concrete slump shall be 4 inches.

i. General: All other materials used in the concrete shall conform to current applicable ASTM specifications.

j. Forms: Forms shall be of wood, plywood, or steel. Wood forms, for surfaces exposed to view in the finished structure and requiring a smooth finish, shall be plywood. For unexposed surfaces, undressed square-edge lumber may be used. Surfaces of steel forms shall be free from irregularities, dents, and sags.

k. Reinforcement: Metal reinforcement shall be provided in accordance with the drawings. Shop drawings for reinforcing steel may be required which indicate bending diagrams, assembly diagrams, splicing and laps of bars, shapes, dimensions, and details of bar reinforcing, accessories, and concrete cover. Do not scale dimensions from drawings to determine lengths of reinforcing rods.

Reinforcing steel shall conform to ASTM A-615, Specifications for Deformed Billet Steel Concrete Reinforcing, and shall be grade 60. Welded Wire fabric shall conform to ASTM A-185, Standard specifications for welded Steel Wire Fabric for Concrete Reinforcement.

l. Vapor Barrier: Vapor barrier material when specified shall be either reinforced Kraft paper or new unplasticized polyethylene film, 6 mils thick minimum.

m. Gravel: Gravel when indicated as fill under concrete slabs shall consist of clean crushed stone, crushed gravel, and uncrushed gravel, 3/4 inch maximum size and 0-5 percent passing a No.4 sieve. The gravel shall be placed directly on the subgrade.

3.0 CONSTRUCTION

a. Subgrade Preparation: The bottom of the excavation or the top of the fill shall be known as the pavement subgrade and shall conform to the lines, grade, and cross sections shown in the plans.

1. Removal of Unsuitable Material: All soft and yielding material and portions of the subgrade that will not compact readily when rolled or tamped shall be removed and replaced with suitable material.

2. Compaction: The subgrade shall be brought to a firm and unyielding condition by compacting it to uniform density. Soil should be compacted at or slightly above standard optimum moisture.

3. Concrete Placement: Concrete shall not be placed on a soft, spongy, frozen, or otherwise unsuitable subgrade. The subgrade shall be moist when concrete is placed.

b. Forms: Formwork shall be in accordance with ACI 347. Coordinate formwork construction with installation of work of other trades to insure adequate placement of materials, sleeves, inserts, and accessories in proper location.

1. Formwork Support: The Contractor shall be fully responsible for adequacy of formwork in its entirety. Forms shall support loads they will be required to sustain and shall maintain their dimensional and surface correctness to produce structures required by the drawings. Immediately before the placing of reinforcing, faces of all forms in

contact with the concrete shall receive a thorough coating of a liquid form releasing agent.

2. Neat Excavation for Footings, Form Alignment, and Chamfering Exposed Edges of Concrete: Concrete for footings may be placed in excavations without forms upon inspection and approval. Excavation width shall be a minimum 4 inches greater than indicated. Set forms mortar-tight and true to line and grade. Provide 3/4 inch chamfers on all above-grade exposed joints, edges, and external corners unless otherwise indicated.

3. Removal of Forms: Prevent concrete damage during form removal. After placing concrete, forms shall remain in place for a minimum of 24 hours. In no case shall supporting forms or shoring be removed until members have acquired sufficient strength to support their weight and imposed loads safely.

c. Reinforcement:

1. Placing Reinforcement and Misc. Materials: Provide bars, wire fabric, wire ties, supports, and other devices necessary to install and secure reinforcement. Reinforcement shall not contain rust, scale, oil, grease, clay, and foreign substances that would reduce the bond. Rusting of reinforcement is a basis of rejection if the effective cross sectional area or the nominal weight per foot of the reinforcement has been reduced to less than specified. Remove loose rust prior to placing steel. Tack welding is prohibited.

2. Reinforcement Protection: The reinforcement shall be protected by the thickness of concrete indicated on the plans. Where not otherwise shown the thickness of concrete over the reinforcement shall be as follows:

   a. Where concrete is deposited against the ground without the use of forms then not less than three (3) inches.

   b. Where concrete is exposed to the weather, submerged, or exposed to the ground, but placed in forms then not less than two (2) inches for bars larger than No. 5 and not less than 1-1/2 inches for No.5 bars and smaller.

3. Wire Mesh Installation: Install and properly support wire mesh reinforcing within two (2) inches of top of concrete slabs on ground and as otherwise indicated. Lap all joints six (6) inches and wire securely. Extend mesh to within two (2) inches of sides and ends of slabs.

4. Tolerances: Place reinforcement and secure with galvanized or noncorrodible chairs, spacer, or metal hangers. Use concrete or other noncorrodible material for supporting reinforcement on the ground.

5. Setting Anchors and Miscellaneous Material: Place and secure anchors and bolts, pipe sleeves, conduits, and other such items in position before concrete placement where possible. Plumb anchor bolts and check location and elevation. Temporarily fill voids in sleeves with readily removable material to prevent the entry of concrete.

d. Concrete Placement: Place concrete as soon as practicable after the forms and the reinforcement have been inspected and approved. Ready mixed concrete hauled in truck mixers or truck agitators shall be deposited in place within 90 minutes from the time water is added to the mix. Do not place concrete when weather conditions prevent proper placement and consolidation; in uncovered areas during periods of rainfall; or in standing water. Prior to placing concrete, remove dirt, construction debris, water, snow, and ice

from within the forms. Deposit concrete as close as practicable to the final position in the forms. Do not exceed a free vertical drop of three (3) feet from the point of discharge. Place concrete in one continuous operation until placement of the section is completed.

1. Consolidation: Consolidate placed concrete using mechanical vibrating equipment with hand rodding and tamping, so that concrete is worked around reinforcement and other embedded items and into all parts of the forms.

2. Protection: Protect concrete from physical damage and reduced strength due to weather extremes. In cold weather comply with ACI 306 and in hot weather comply with ACI 305.

e. Joints: Provide construction, expansion, and control joints as indicated or required. Locate construction joints so as to not impair the strength and appearance of the structure. Place expansion and control joint in slabs on grade to stabilize differential settlement and random cracking.

1. Expansion Joints: Expansion joints shall be located where slabs meet with a vertical wall surface, to isolate fixed objects, at fifty (50) foot intervals unless indicated otherwise and where indicated on the drawings.

2. Control Joints: Unless otherwise shown, control joints shall be installed at uniform intervals not to exceed twenty (20) feet. Control joints or contraction joints shall be formed by one of the following methods: sawing, forming by hand, forming by premolded filler or using full depth construction joints. Joint depth shall be minimum of 1/4 the slab thickness. Hand formed joints shall have a maximum edge radius of 1/4 inch. Sawing of joints shall begin as soon as the concrete has hardened sufficiently to permit sawing without successive raveling. All joints shall be completed before uncontrolled shrinkage cracking occurs. Joints shall be continuous across the slab, unless interrupted by full-depth premolded joint filler.

3. Construction Joints: Construction joints, as required, shall be located at control joint locations. The constrution joint shall be keyed and bond between successive pours shall be broken with curing compound.

f. Waterstops: Waterstops in joints, where indicated, shall be polyvinylchloride of types as shown on the drawings.

g. Finishes of Formed Surfaces: Concrete surfaces which will be exposed to view in the completed work, including tops of walls and curbs, shall be given a smooth-rubbed finish. Provide on newly hardened concrete within 24 hours following form removal. Wet surfaces and rub with an abrasive tool to produce uniform color and texture. Use only the cement paste drawn from the concrete rubbing process.

h. Concrete Finishing: After concrete has been struck off and consolidated, a bullfloat may be used to obtain the proper contour, grade, and elevation before bleedwater appears. Bullfloat use shall be confined to a minimum. Permit concrete to attain a set sufficient for floating and supporting the weight of the finisher and equipment. If bleedwater is present prior to floating the surface, drag the excess water off or remove by absorption with porous materials. Do not use dry cement to absorb bleedwater. Provide a broomed finish for exterior walks, platforms, patios, and ramps, unless otherwise indicated. Provide a floated finish, then finish with a flexible bristle broom. Permit surface to harden sufficiently to retain the scoring or ridges. Broom transverse to traffic or at right angles to the slope of the slab.

1. Pavement: After screeding, float the concrete longitudinally. Use a straight edge to check slope and flatness; correct and refloat as necessary. Obtain final finish by a burlap drag. Drag a strip of clean, wet burlap across the slab to produce a fine, granular, or sandy textured surface without disfiguring marks. Round edges and joints with an edger having a radius of 1/8 inch.

2. Concrete Walks: Provide four (4) inches thick minimum. Provide contraction joints spaced every 5 linear feet unless otherwise indicated. Cut contraction joint one (1) inch deep with a jointing tool after the surface has been finished. Provide 1/2 inch thick transverse expansion joints at changes in direction where sidewalks abuts curb, steps, rigid pavement, or other similar structures; space expansion joints every fifty (50) feet maximum apart. Provide walks with a broomed finish. Provide a transverse slope of 1/4 inch per foot.

3. Curbs: Curbs shall be constructed as indicated on the drawings and in accordance with Section 720 of the SCHD SSHC. Provide contraction joints spaced every ten (10) feet maximum unless otherwise indicated and at the beginning and ending of radii. Cut contraction joints 3/4 to 1 inch deep with a jointing tool after the surface has been finished. Provide expansion joints 1/2 inch thick and spaced every 100 feet maximum unless otherwise indicated. Provide a smooth rubbed finish.

i. Curing: Concrete shall be cured by protecting it from loss of moisture, rapid temperature change, and mechanical injury for at least three days after placement. After all free water has disappeared from the surface, a liquid membrane-forming compound or other approved curing material shall be uniformly sprayed on all exposed surfaces. Rate of application shall be in accordance with manufacture's recommendations. Surfaces to receive finishes set in Portland cement setting beds shall be covered with polyethylene or reinforced Kraft paper, or with sand. Do not use spray on curing compound. Lap Kraft parer, and keep weighted down to prevent evaporation. Keep sand moist.

j. Opening to Traffic: Pavement shall be closed to traffic for at least three full days or until such time that the minimum compressive strength of the concrete is at least 75% of its design strength.

k. Testing: The Contractor shall be responsible for sampling and testing of concrete as necessary to meet the minimum strength and material requirements of these specifications, as directed by the Engineer. Testing shall be performed by a certified independent testing laboratory.

END OF SECTION

RELATED DOCUMENTS: Attention is directed to Divisions A (Bidding Requirements), B (Contract Documents), and 1 (General Requirements), which are binding in their entirety on this portion of the work and in particular to paragraphs concerning materials, workmanship, and substitutions.

General Conditions of the Contract and Special Conditions of the Contract shall apply to all Sections of the Work.

1.0 SCOPE OF WORK

a. General Requirements: This section includes furnishing all labor, material, and equipment and performing all operations required for the installation of underground pressure lines, including valves, service connections, all appurtenances and testing of lines as shown on drawings and herein specified. All water system lines and appurtenances shall be installed in accordance with the local Water System specifications and requirements.

b. Layout: The layout of lines and invert elevations at governing points are shown on drawings.

c. Communication with Owner and Engineer: The Contractor shall deal with the Owner or the Engineer in all matters pertaining to this Contract, the work schedule and completion of the work.

d. Maintenance of Control Points: Property pins have been set for Contractor's reference. The pins have been well marked and are visible. The cost of resetting property pins disturbed or destroyed by the Contractor shall be backcharged to the Contractor at a rate of $50.00 per pin.

e. Work Procedure and Requirements: The following is a description of the work procedure which shall be followed and the requirements of this project.

1. Pre-construction Meeting: There shall be a pre-construction meeting between the Contractor and the Owner/Engineer for coordination purposes.

2. Excavation and Backfilling for Taps: The Contractor shall be responsible for all excavating and backfilling if taps and connections are made by the local Water System.

3. Tapping Fees: The Contractor shall pay for any fees associated with tapping into the local Water System.

4. Coordination of Work with the Local Water System: The Contractor shall coordinate and schedule tapping work with the local Water System as required for the benefit of his work schedule.

5. Adherence to Standards and Specifications: The water system shall be installed, tested and sterilized in accordance with these and the local Water System Specifications.

6. Service Fees by Local Water System: The local Water System may have a service fee charge for work trips to the job site when requested by the Contractor and the job site is not ready for work. All such fees shall be paid for by the Contractor and not backcharged to the Owner.

f. Supplier Certification: The successful bidder must furnish the Engineer with the name of the Contractor's material supplier and his sales contract. The Owner will verify delivery dates

before the contract is awarded. Availability of material will be an important consideration in awarding the contract.

g. Separation of Water and Sewer Lines: Separation of water lines and sewer lines must conform to "Ten State Standards", (Section 29.3), a 10' horizontal separation should be maintained between water and sewer lines. Where this separation cannot be met or where water and sewer lines must cross, an 18" vertical separation, water over sewer, must be maintained. Where the above conditions cannot be met, water and sewer lines should be cast or ductile iron pipe with joints staggered such that maximum separation between joints exists.

h. Traffic Control: The Contractor shall be responsible for conducting all work in streets, roads, and highways in accordance with any and all Regulatory Authorities' current requirements. As a minimum, for any work in State Highways, the Contractor shall meet the requirements of Traffic Controls for Street and Highway Construction and Maintenance Operations, Part V of the South Carolina Manual on Uniform Traffic Control Devices for Streets and Highways - 1982, latest revision.

2.0 MATERIALS

Notes: All reference shall be to the latest version for the specified product. Contractor shall verify with the local Water System for approvals for all pipe and appurtenances to be installed on the project.

ALL PIPE SHALL BE MADE IN THE USA !

a. Pipe

1. Cast Iron - All cast iron pipe furnished shall be designed, manufactured, and tested in accordance with ANSI specifications A21.1, A21.4 (except 1/2 specified lining thickness) and A21.6 or A21.8. Outside diameter shall conform to A21.6 class 150 standards for each pipe size and the wall thickness for each pipe size shall not be less than that specified under A21.6 for thickness Class 22, 21/45 iron. "Push-on" type joint is approved. All galvanized steel pipe furnished will be standard weight with threaded and coupled joints meeting the requirements of AWWA C 200-49. All copper pipe furnished shall be seamless Type "K" hard drawn copper in accordance with ASTM B-88, suitable for sweating and soldering.

2. Ductile Iron - All ductile iron pipe furnished will be designed, manufactured and tested in accordance with ANSI specifications A21.50, A21.51 and AWWA C 150 and C 151. Joints shall be push-on type. Pipe shall be minimum class 51 for a working pressure of 350 psi. Fittings shall be ductile iron and rated as a minimum to equal the pressure rating of the pipeline. Gaskets shall be synthetic rubber.

3. PVC - All polyvinyl chloride pipe (PVC) shall be NSF and AWWA approved and shall be capable of withstanding working pressures up to 200 psi. The Standard Dimension Ratio (SDR) shall not exceed 21. The pipe shall have push-on type joints with provision for expansion and contraction at each joint with a rubber ring. The bell shall consist of an integral wall section with a solid cross-section rubber ring which meets the requirements of ASTM D-1869. Solvent weld joints are not acceptable. Standard laying lengths shall be 20 feet (+ one inch) for all sizes. At least 85 percent of the total footage of pipe in any class and size shall be furnished in standard lengths and 15 percent may be in random lengths. Random lengths shall not be less than 10 feet long. Each joint shall be hydrotested for four (4) times the class rating of the pipe to measure ability to resist water hammer.

b. Fittings

ALL FITTINGS SHALL BE MADE IN THE USA !

1. Compact Ductile Iron Fittings - 4" through 12" fittings, shall be made from Ductile Iron Grade 70-50-05 per ANSI A21.53. Fittings and accessories shall be mechanical joint per ANSI A21.10 and A21.11. Wall thickness shall be equivalent to Ductile Iron Class 54. Exterior bituminous coating per ANSI A21.10. Cement lining per ANSI A21.4.

2. Ductile and Gray Iron Fittings - 3" through 48" All cast and ductile iron fittings shall be manufactured and tested per ANSI A21.10. The iron shall comply with ASTM A48, Class 25 for cast iron fittings and shall be Grade 70-50-05 for ductile iron fittings. Metal thickness shall conform to AWWA C100, Class D. Mechanical joints shall comply with ANSI A21.11.

3. Galvanized Fittings - All 2" fittings shall be standard weight maleable galvanized iron with standard iron pipe thread.

4. Copper Fittings - All copper fittings shall be seamless Type "K" copper in accordance with ASTM B-88.

c. Valves - Iron body bronze - mounted gate valves, sizes 3" through 12", inclusive; order specifications: Double-Disk, Parallel Seats, Non-Rising Stem (NRS), rated at 200 psi WWP, O-ring seals, Standard 2" square wrench nut, and conforming to AWWA Spec. C-500 in all respects. Check with local Water System Engineering Office for direction of opening.

APPROVED VALVES, SIZES 3" TO 12" INCLUSIVE, M.J. ENDS

MANUFACTURER	CATALOG NO.
AMERICAN DARLING	55
LUDLOW	AWWA
MUELLER	A-2380-20
SMITH-METROPOLITAN, U.S. PIPE	3460

Note: All 2" valves shall be bronze gate valves, 125 psi, SWP or 200 psi WOG, solid wedge, inside screw, non-rising spindle, open counter clockwise (open left), screwed ends, with standard markings and complying with Fed. Spec. WW-V-54.

APPROVED VALVES, SIZE 2"

MANUFACTURER	CATALOG NO.
CRANE COMPANY	438
JENKINS BROTHERS	370
KENNEDY VALVE MFG. CO.	427
LUNKENHEIMER	2129

Note: Check with the local Water System Engineering Office for Specifications on all valves over 12" size.

d. Fire Hydrants - All fire hydrants will be 4-1/2" minimum nominal valve opening, National Standard Nozzle Threads and Operating Details, Two 2-1/2" nozzles, and one 4-1/2" nozzle, 6" Mechanical Joint Inlet Connection, depth of bury to suit field conditions, painted highway safety yellow, breakable ground flange and conforming to AWWA Specifications C 502. Hydrants shall have bronze to bronze main valve seat ring mounting. Check with local Water System Engineering Office for direction of opening.

APPROVED HYDRANTS

MANUFACTURER	CATALOG NO.
AMERICAN DARLING	B-62-B (3 WAY)
A.P. SMITH, U.S. PIPE	H205 (3 WAY)
MUELLER	A24007 (3 way)
MUELLER CENTURION	A421

e. Valve Boxes - Top and Bottom Sections. Conforming to and approved by the local Water System.

APPROVED VALVE BOXES

MANUFACTURER	CATALOG NO.
CHERRYVILLE FOUNDRY	HEAVY DUTY
POE CORP.	107

f. Double check Valve Assemblies - Conforming AWWA 6506 and to the local Water System Standard.

APPROVED ASSEMBLIES

MANUFACTURER	CATALOG NO.
WATTS	700 SERIES
BEECO	VC, F72
FEBCO/JOHNS MANVILLE	805

3.0 PIPE TRENCH EXCAVATION

a. Classification: Excavation shall be classified as either "common excavation" or "rock excavation". "Rock excavation" shall be such material which cannot be removed by means other than by blasting or with an air hammer. Materials which can be removed by ripping shall not be considered "rock excavation". "Common excavation" shall include all types of materials that do not fall into the category of "rock excavation" as defined above. Classification of excavation shall be determined by the Owner or Engineer. It shall be the Contractor's responsibility to notify the Owner or Engineer when "rock excavation" is encountered. The Contractor will not be credited for any rock quantities excavated before such notice is given.

b. Blasting Insurance: If conditions are such that blasting or any use of explosives is required, the Contractor, prior to blasting, shall submit to the Owner/Engineer satisfactory evidence of blasting and explosive insurance in the amounts of bodily injury and property damage insurance required in the Special Conditions and shall prove to the satisfaction of the Owner/Engineer the experience and capability of the Contractor's organization to safely handle and perform such operations.

c. Qualifications and Safety for Blasting: Handling and storing of blasting materials shall be performed only by qualified persons skilled in such work. Adequate precautions shall be taken to prevent accidents, injury to persons, or damage to property. Qualifications of blasting operations personnel and safety precautions shall be in full compliance with local codes governing such operations and shall be approved by the Owner/Engineer.

d. Trench Excavation and Safety: Full responsibility for the excavation and side slopes of all trenches shall rest with the Contractor. The trench shall be excavated to provide a safe work area to place the pipe, to a depth to permit installation of the pipe along the lines and grades

shown on the drawings. The width of the trench shall be sufficient to allow thorough compacting of the backfill under and around the pipe, and in no case shall be less than 18 inches greater than the outside diameter of the barrel of the pipe. Where excavation is in rock, the rock shall be removed to a depth below grade of at least 4 inches for pipes smaller than 30 inches in diameter, and 6 inches for pipes 30 inches in diameter and larger; and before laying the pipe, the trench shall be refilled to grade with earth, sand, gravel or other suitable material, firmly compacted to provide proper bedding for the pipe.

e. Excavation for Bell Ends: Bell holes shall be excavated accurately to size.

f. Direction Changes: All changes in direction shall be made by pipe joint deflection, unless otherwise shown. Maximum deflection for pipe joints shall be in accordance with manufacturer's recommendations. All intersecting lines shall connect with standard fittings.

g. Rock Excavation: Rock excavation encountered shall be classified as specified in Article 3 - "Pipe Trench Excavation". Payment for same shall be at the contract unit price. Measurements for payment of rock excavation shall not extend more than 6 inches below the pipe invert nor more than one (1) foot on each side of the pipe outside diameter.

i. Trench Advancement: The amount of trench excavated ahead of pipe laying shall be subject to the approval of the Owner/Engineer.

j. Trenching through Traffic Areas: The Contractor shall do all necessary bracing and bridging to maintain traffic during construction through areas affected by trenching.

4.0 BRACING, SHEETING, AND SHORING

a. Trench Support and Safety: The sides of all trenches and excavation shall be adequately braced and sheeted to protect personnel, structures and property from slides, cave-ins, or settlement and to maintain the work clear of all obstructions. Bracing, shoring and sheeting shall comply with all applicable safety regulations governing the work. Full responsibility to all excavations and for the design, type and strength of shoring, sheeting and bracing shall rest with the Contractor.

b. Removal of Shoring Materials: Sheeting, shoring or bracing materials shall not be left in place unless otherwise shown on the plans or ordered by the Owner/Engineer in writing. Such materials shall be removed in such a manner that no danger or damage will occur to structures or property, public or private, and so that cave-ins or slides will not take place. Wood sheeting shall be left in place until backfill has been brought to a level 12 inches above the top of the pipe. It shall then be cut off and the upper portion removed before backfilling continues. Steel sheeting may be pulled in a manner approved by the Owner/Engineer.

c. Clean-Up: All holes and voids left in the work by the removal of sheeting, shoring or bracing shall be filled and thoroughly compacted.

5.0 PIPE LAYING

a. Handling and Safety: Proper implements, tools, and facilities satisfactory to the Owner/Engineer shall be provided and used by the Contractor for safe execution of the work. All pipe, fittings and valves shall be carefully lowered into the trench, piece by piece, by means of derrick, ropes, or other suitable tools or equipment, in such manner as to prevent damage to materials and material coatings. Under no circumstances shall pipe or accessories be allowed to drop during handling, and they shall not be dropped or dumped into the trench.

b. Pipe Cleaning: All foreign matter and dirt shall be cleaned from the inside of pipe and valves before lowering into position in the trench, and they shall be kept clean during and after laying.

c. Protection of Pipe from Water Infiltration: During times when pipe laying is not in progress, the open ends of pipe shall be closed and no trench water shall be permitted to enter the pipe.

d. Pipe Cutting: Cutting of pipe for inserting valves, fittings, or other closure pieces shall be done in a neat and workmanlike manner without damage to the pipe.

e. Weather Conditions: No pipe shall be laid in water, or when trench conditions or weather is unsuitable for such work, except by permission of the Owner's Representative.

f. Pipe Support: Before laying pipe, the bottom of the trench shall be prepared to provide uniform and substantial bearing throughout the length of the pipe. In firm ground, the pipe shall be laid upon the graded bottom of the trench. In ground that is not otherwise sufficiently firm to support the pipe, crushed stone or gravel shall be worked into the bottom of the trench until the necessary degree of firmness is obtained, as approved by the Owner's Representative.

g. Pipe Inspection: Before lowering pipe into trenches, and while suspended, each section of pipe shall be thoroughly inspected, particularly the ends, for damage which may effect the strength of the pipe and the suitability of the joint. Defective or damaged pipe shall be rejected. Scars in the pipe coating shall be repaired by the Contractor with materials compatiable with the original coating.

h. Pipe Laying Procedure: Pipe shall be laid with bell ends facing in the direction of pipelaying, unless directed otherwise by the Owner/Engineer. Where pipe is laid on a grade of 10 percent or greater, the laying shall start at the bottom of the slope and proceed upward with the bell ends of the pipe upgrade. All pipe sleeves or double hubs required to connect pipe when laying to a junction from opposite directions, when done so at the Contractor's option to facilitate pipelaying, shall be furnished and installed at the Contractor's expense.

6.0 SETTING APPURTENANCES

a. General Requirements: All valves and fittings shall be set in a manner conforming to the applicable conditions. If flange joints are required, the Contractor shall furnish and install all jointing materials required for making joints in accordance with the best practice for such work. Operation nuts on valves shall extend to within 6 inches of grade.

b. Valve Boxes and Pits: Cast iron valve boxes shall be firmly supported, and maintained centered and plumb over the wrench nut of the gate valve, with box cover flush with the surface of the finished pavement or at such other level as may be directed. All geared valves and such other valves and special appurtenances shown or noted shall be set in masonry valve pits as shown on drawings. Pits shall be constructed in a manner that will afford protection to the pipe from impact passing through the pit walls.

c. Backflow Prevention: Drainage branches or blow-offs shall not be connected to any sewer, submerged in any stream or installed in any other manner that will permit back-siphonage into the system.

7.0 DEWATERING

a. General Requirements: The Contractor shall do all pumping necessary for dewatering trenches and to provide proper conditions for installation of pipe and appurtenances.

8.0 PIPE ANCHORAGE METHOD

a. Thrust Blocks: At all bends, tees, wherever shown and as described on drawings, provide a concrete mass, of size required for test pressures, poured against firm natural earth, to act as thrust block and anchor. The concrete shall be 3,000 lb. batched concrete approved by the Owner/Engineer. As an alternate, the concrete may be job mixed, subject to approval by the Owner/Engineer.

b. Tie Rods: Wherever required, anchorage against thrust shall be accomplished by the use of tie rods. Where bends, tees, or other fittings are to be anchored to slip joint pipe, socket clamps shall be used behind the bells to provide tie rod fastening. All bends, tees and fittings tied accordingly shall be anchored by two tierods for at least one full (20 ft. min.) pipe length, or as called for on the drawings. All plugs at ends of pipe lines or on fittings shall be retained by two tie rods for at least one full (20 ft. min.) pipe length. Where short lengths of pipe are used to make up fittings or plugged ends, the tie rods shall be extended to the end of the next full length of pipe.

c. Protective Coatings on Tie Rods: All tie rods, socket clamps, and sockets shall be given a coat of asphalt paint after installation and prior to backfilling of the trench.

9.0 BACKFILLING

a. General Requirements: Immediately after the pipe has been laid, and approved by the local Water System, the trench shall have a controlled backfill placed around the barrel of the pipe with fine material, free of large stones, deposited in level layers not more than 6 inches in depth. Each layer shall be thoroughly mechanically tamped and compacted before the next layer is deposited.

b. Testing Options: The Contractor shall have, subject to the approval of the Owner/Engineer, the option of applying the specified hydrostatic pressure test to pipe laid in an open trench or to pipe in a backfilled trench. If the Contractor elects to backfill pipe trenches before testing, he shall not be relieved from locating points of excessive leakage and making all necessary repairs to joints, replacing pipe and other corrective work. The Owner/Engineer shall have the right to withdraw his approval for pressure testing pipe after backfilling pipe trenches at any time if, in his judgement, this practice is not in the best interests of the Owner and the quality of the completed project.

c. Testing Before Backfilling: For pressure testing pipe in open trenches, the backfill shall be made along the barrel of the pipe, only, and to a level between the mid-diameter of the pipe and the top of the pipe. Backfill shall be kept away from the joints during testing and until after all joint or other repairs have been successfully made.

d. Compaction: Controlled backfill, using fine material, shall be the prescribed density. Wetting or drying of the material and thoroughly mechanically tamped. Remaining backfill may be placed in 12 inch to 18 inch lifts to a minimum depth of 30 inches above the top of the pipe and compacted by backfiller of hydra-hammer, all subject to approval by the Owner's representative. All trenches located under paved roads within the right-of-way or located in areas subject to vehicular traffic shall be backfilled and compacted to 95 percent of maximum density at optimum moisture content. The upper 18" of trench backfill shall be compacted to 100 percent of maximum density at optimum moisture content.

1. Compaction Testing Method: The method of testing for maximum density shall be in accordance with ASTM D-698 (Standard Proctor Test). The material to be compacted shall be of the proper moisture content to obtain the prescribed density. Wetting or drying of the material and manipulation to secure a uniform moisture content throughout each layer shall be required.

2. Proof Rolling and Compaction Testing Requirements: Proof rolling and/or compaction tests shall be required at the discretion of the Owner/Engineer.

3. Responsibility for Compaction Testing Costs: The Owner shall retain the services of a testing laboratory to perform all tests required under this specification. The cost of the initial test shall be paid for by the Owner; subsequent tests required as a result of improper compaction, shall be paid for by the Contractor.

4. Responsibility for Proof Rolling Costs: Costs for proof rolling will be paid for by the Contractor whenever it is required.

e. Maximum Stone Sizes: No stone larger than 6 inches in its greatest dimension shall be used in any part of the backfilling. Stones placed in backfill shall be separated by soil in order to prevent air pockets.

f. Compaction under Pavement: Where it is important that the surface of the backfill be made safe for vehicular traffic as soon as possible, or where a permanent pavement is to be placed within a short time, the upper 12 inches of backfill shall be of approved moist material, thoroughly compacted in thin (4 inch) layers by tamping, and shall be brought to the required surface grade.

g. Insufficient Fill Quantity: Any deficiency in the quantity of material for backfilling the trench, or for filling depressions caused by settlements, shall be supplied by the Contractor.

h. Replacement of Existing Pavement, Utilities, and Structures: The Contractor shall replace all existing paving, utilities, and other structures which are damaged by the work or the Contractor's operations under this contract to the satisfaction of the Owner/Engineer and in accordance with details on plans or with requirements by governing official bodies such as State and County Highway Departments, or others. In no case shall the replacement be of less quality or quantity than the original installation.

i. Contractor Relationship with Owner and Public Utility: With respect to the Contractor-Owner-Public Utility relationship which inherently exists in utility work, the following shall apply during the course of this project:

1. Easements, Encroachment Permits, and Access Rights: The Owner shall obtain all easements, encroachment permits, deed and other permanent access rights necessary for the completed project. All other rights for access and storage during construction shall be obtained by the Contractor through direct dealings with public officials and agencies and with property Owner.

2. Repair and Replacement of Existing Facilities: It is understood that the drawings contain specific details on major repair items and that where applicable, these details are in accordance with encroachment permits. It is also understood, though not specifically defined on plans, that the Contractor is responsible for all other major and minor repairs to existing facilities and that the extent of this responsibility is implied by existing conditions at the beginning of the work.

3. Highway Department Requirements: With specific reference to property of the State Highway Department; and since degree of enforcement relates directly to relationships maintained with that agency during construction; and since working with the various Highway Department Offices is an integral part of utility construction; the Contractor shall be responsible for satisfying the requirements of the Highway Department(s) whether shown on plans or implied by existing conditions or ordered verbally by that agency. No instruction by the Owner or his Representatives shall relieve the Contractor of this direct

responsibility and obligation to fulfill the requirements of the Highway Department under the Work of this Contract.

j. Existing Underground Utilities: With respect to existing underground utilities, the following shall apply during the course of the project.

1. Precautions: Special precautions shall be taken by the Contractor to avoid damage to existing overhead and underground utilities owned and operated by the Owner or by public or private utility companies.

2. Limitations of Available Information Shown on Plans: With particular respect to existing underground utilities, all available information concerning their location has been shown on the plans. While it is believed that the locations shown are reasonably correct, neither the Engineer or the Owner can guarantee the accuracy or adequacy of this information.

3. Coordination with Public Utilities Prior to Beginning Work: Before proceeding with the work, the Contractor shall confer with all public or private companies, agencies, or departments that own and operate utilities in the vicinity of the construction work. The purpose of the conference, or conferences, shall be to notify said companies, agencies, or departments of the proposed construction schedule, verify the location of, and possible interference with, the existing utilities that are shown on the plans, arrange for necessary suspension of service, and make arrangements to locate and avoid interference with all utilities (including house connections) that are not shown on the plans. The Engineer and Owner have no objection to the Contractor arranging for the said utility companies, agencies, or departments to locate and uncover their own utilities; however, the Contractor shall bear the entire responsibility for locating and avoiding or repairing damage to said existing utilities.

4. Palmetto Utility Location Service: The Contractor shall notify Palmetto Utility Location Service at 1-800-922-0983 at least 3 days prior to digging on the site.

5. Pipe Locator: It is suggested that the Contractor locate all unknown metallic hazards, namely buried pipe, metals, etc., by using a pipe locator. The pipe locator shall immediately precede the trench ditching and all hazards located and marked in such manner as to notify the machine operator of such hazard.

6. Protection of Existing Utilities: When existing utilities or appurtenant structures, either underground or above ground, are encountered, they shall not be displaced or disturbed unless necessary, and in such case shall be replaced in as good or better condition than found as quickly as possible.

7. Permanent or Temporary Relocation of Utilities: Permanent or temporary relocation and replacement of all utilities and appurtenant structures to accommodate the construction work shall be at the Contractor's expense.

k. Restoration of Lawn and Landscaped Areas: Where trenching operations occur on "cultivated" grassed or landscaped areas, privately or publicly owned, the Contractor shall spread the stockpiled topsoil and restore said property to its original state.

10.0 PIPE JOINTS

a. General Requirements: Pipe joints shall be made up in strict accordance with the manufacturer's printed recommendations and specifications.

11.0 PITS AND PIPE SUPPORTS

a. General Requirements: Pits and pipe supports shall be constructed in accordance with detail drawings with materials as specified under other Divisions and Sections of the Work. Frames and covers shall be of sizes and types indicated on drawings.

12.0 HIGHWAY CROSSINGS

General Requirements: Where water pipes cross highways, the crossings may be made by open cut, unless directions are otherwise issued by the Owner/Engineer.

13.0 PRESSURE AND LEAKAGE TESTS

a. General Requirements: After the pipe has been laid and backfilled or partially backfilled (Contractor's option in accordance with these Specifications), each valved section of pipelines shall be subjected to hydrostatic and leakage tests in accordance with the applicable requirements of AWWA C 600-82, Section 4 - Hydrostatic Tests.

b. Test Method: Before applying the test, all air shall be expelled from the pipe. Each valved section of the pipe shall be slowly filled with water and the specified test pressure shall be applied by means of a pump connected to the pipe in a satisfactory manner. The pump, pipe connection and all necessary apparatus and gauges shall be furnished by the Contractor. The Contractor shall make necessary taps into the pipe and shall furnish all work necessary for conducting the test. The local Water System shall witness all tests.

c. Pressure and Duration: Test pressure and duration for all pipelines shall be as directed by the local Water system.

d. Allowable Leakage: No pipe installation shall be accepted if leakage is greater than that determined for mechanical and push-on joint pipe in AWWA C 600-82, Section 4. Leakage test shall be less than that determined by the formula L= ND P/7400 or other approved formulas of the local Water System, where:

L = allowable leakage (gal./hr.)
N = number of joints in length of pipeline tested
D = diameter of pipe (inches)
P = average test pressure (psig)

e. Replacement of Defective Areas in System: Defective pipe, joints, fittings, valves, accessories or workmanship shall be removed or corrected. Tests shall be repeated until satisfactory to the local Water System.

14.0 STERILIZING PIPELINES

a. General Requirements: Before being placed in service and after the hydrostatic tests are completed, all pipe and fittings installed under this contract shall be sterilized. All new mains and repaired portions thereof, or existing mains should be thoroughly flushed then chlorinated with not less than fifty parts per million (50 ppm) of available chlorine. Chlorine gas or seventy percent high-test calcium hypochlorite can be used. Water from the existing distribution system or other source of supply should be controlled so as to flow slowly into the newly laid pipeline during the application of chlorine. The solution should be retained in the pipeline for not less than twenty-four (24) hours and a chlorine residual of 25 ppm should be available at this time.

b. Compliance with DHEC and Local Water System Specifications: All rules and regulations of the South Carolina Department of Health and Environmental Control (DHEC) and the local Water

System shall be compiled with. The specified procedure shall be modified as necessary to comply with these rules and regulations.

c. Pipe Flushing Prior to Sterilization: Prior to sterilization, all dirt remaining in pipe after its completion shall be removed by a thorough flushing out. This may be done either before or after the trench shall have been backfilled ,but after the pressure test. Each valved section of newly laid pipe shall be flushed independently.

d. Backflow Prevention: Backflow in the pipe being treated shall be prevented.

e. Operation of Valves During Sterilization: In the process of sterilizing newly laid water pipe involving more than one valved section, all valves or other appurtenances shall be operated while the pipeline is filled with the sterilization agent.

f. Pipe Flushing After Sterilization: Following sterilization, all treated water shall be thoroughly flushed from the newly laid pipeline at its extremities until the water through its length shall be proven upon test, both chemically and bacteriologically, equal to the water quality served to the public from the existing water supply system. Tests shall be performed by the local Water System Laboratory.

g. Repeat Sterilization: Should the initial treatment prove ineffective, the sterilization procedure shall be repeated until confirmed tests show that water sampled from newly laid pipeline conforms to the requirements.

15.0 CLEAN UP

a. General Requirements: The Contractor shall remove all excess material from excavations and clean the site of the work of all debris collected during construction.

16.0 FIELD COATING

a. General Requirements: All tie rods, clamps and structural steel members shall receive one coat, eight mils dry film thickness, of Amercoat No. 79, or approved equal. Coatings application shall be in accordance with manufacturer's recommendations.

END OF SECTION

RELATED DOCUMENTS: Attention is directed to Divisions A (Bidding Requirements), B (Contract Documents), and 1 (General Requirements), which are binding in their entirety on this portion of the work and in particular to paragraphs concerning materials, workmanship, and substitutions.

General Conditions of the Contract and Special Conditions of the Contract shall apply to all Sections of the Work.

1.0 SCOPE

a. General Requirements: This section includes furnishing all labor, materials, and equipment for the installation of all drainage lines, including headwalls, inlets, catch basins, and other special appurtenances and structures as required for this project, shown on the drawings and specified herein.

b. Pipe Layout and Elevations: The layout of underground lines and invert elevations at governing points are shown on the drawings.

c. Inspection Required Before Backfilling: All pipe shall be inspected by the County inspector prior to backfilling operations.

d. Invert Elevations: All grades shown as pipe elevations are to the bottom of inside of pipe, unless otherwise noted.

e. Connections and Changes in Direction: All connections and changes of direction shall be made at inlets as shown.

f. Material Specifications: Where more than one material for an item is specified, the material used shall be as noted on the drawings or specified elsewhere in the Contract Documents.

g. Traffic Control: The Contractor shall be responsible for conducting all work in streets, roads, and highways in accordance with any and all Regulatory Authorities' current requirements. As a minimum, for any work in State Highways, the Contractor shall meet the requirements of Traffic Controls for Street and Highways Construction and Maintenance Operations, Part V of the South Carolina Manual on Uniform Traffic Control Devices for Streets and Highways - 1982, latest revision.

2.0 MATERIALS

Note: All ASTM references shall be the latest version for the specific product.

a. Concrete: Concrete shall be 3000 psi mix using Portland Cement ASTM C-50 Type 1, sand ASTM C-33 and coarse aggregate ASTM C-33.

b. Rebar: Reinforcing bars shall conform to ASTM A 615, new billet steel, intermediate grade.

c. Water: Water shall be clean, free from oils, acids, alkalis, or organic or deleterious substances.

d. Reinforced Concrete Pipe (RCP): Reinforced concrete pipe shall be Tongue-and-Groove, Class III-Wall B, unless otherwise indicated on the drawings and shall conform to requirements of ASTM C-76.

e. Gray Iron Castings: Frames, solid covers and grates for drainage structures shall be gray iron conforming to ASTM A-48, size as indicated, free from blow holes, porosity, hard spots, shrinkage distortion or other defects, well cleaned and coated with asphalt paint which shall result in smooth

coating, tough and tenacious when cold, not tacky and not brittle. Bearing surface between frame and cover or grate shall be machined to prevent rocking and rattling.

f. Steps: Steps for manholes and drainage structures more than 4' deep shall be manufacturer's standard, spaced and embedded per OSHA requirements and approved by the Owner/Engineer.

g. Welded Wire Fabric: Welded wire fabric shall conform to ASTM A-185.

h. Masonry: Masonry materials for drainage structures are detailed on plans as concrete brick. Concrete manhole block and precast sections are equally acceptable, subject to design approval by the Owner/Engineer.

1. Concrete Brick: Concrete brick for storm inlets and catch basins shall be standard size, ASTM C-90, Class A.

2. Concrete Block: Concrete block for storm drainage manholes shall comply with ASTM C-139.

3. Precast Manholes: Precast concrete manhole sections shall be 4000 psi concrete, tongue and groove, steel fabric reinforced, cement mortar joints bitumastic sealed, in accordance with ASTM C-478. Precast manholes shall have a conical top, coursed with brick. Precast bottoms are permissible. Handling holes shall be plugged with mortar or stoppers.

4. Portland Cement: Portland Cement shall be by an approved manufacturer, ASTM C-150, Type I.

5. Sand: Sand shall comply with ASTM C-144.

6. Lime: Lime shall be hydrated, ASTM C-207, Type N.

7. Water: Water for masonry materials shall be potable, free of suspended matter, injurious amounts of acids, or alkalis, and containing no industrial or domestic wastes.

8. Mortar: Mortar for drainage structures shall be 1 part of Portland Cement, 10% hydrated lime, 2 parts sand by volume, mixed with sufficient water to form a plastic mortar.

9. Flexible Butyl Resin Sealant: Flexible Butyl Resin Sealant shall comply with AASHTO specification M-198 B, similar to Butyl Tite or ConSeal or approved equal.

i. PVC Pipe:

1. Polyvinyl Chloride (PVC) Pipe and Fittings (10-Inch Diameter and Smaller): ASTM D-3033 or ASTM D-3034, SDR 35, with ends suitable for either solvent cement or elastomeric gasket joints.

2. Polyvinyl Chloride (PVC) Perforated Pipe and Fittings: ASTM D-2729 with one-half inch diameter holes 5 to 8 inches on center, 120 degrees apart.

j. 2.17 Corrugated Aluminum Pipe and Fittings: Fed. Spec. WW-P-402 or AASHTO M-196, Class I or II, circular and arched; minimum thickness of metal shall be 18 gage.

k. 2.18 Corrugated Steel Pipe and Fittings: Fed. Spec. WW-P-405 and AASHTO M-36, Class I or II, circular and arched. Minimum thickness of metal shall be 18 gage. Pipe with annular corrugations shall be fully bituminous coated, half paved, for pipe diameters 18 inches and less. Pipe with helical corrugations shall be fully bituminous coated for pipe diameters 18 inches and less. Pipe larger than 18 inches diameter shall be fully bituminous coated and fully paved. Helical-corrugated pipe and fittings, when used with pipe joints, shall have a minimum of two factory-rolled annular corrugations at each end.

l. Corrugated Metal Watertight Joints: Fed. Spec. WW-P-405 for steel pipe and WW-P-402 for aluminum pipe. The circumference of the coupling bands shall be provided with a 3 inch lap minimum. For tightening each coupling band, provide four 1/2 inch galvanized steel bolts. Gaskets shall be cylindrical in shape, fabricated of 3/8 inch thick by 6-1/2 inch minimum width rubber conforming to ASTM D-1056. Diameter of cylindrical gasket shall be 10 percent less than the nominal pipe diameter. On riveted pipe and fittings, omit the longitudinal seam rivets which would be under the coupling band and weld that portion of the seam. Coupling bands shall be of one or two piece construction and bituminous coated when specified for the pipe.

m. Filter Fabric: Woven or nonwoven polypropylene, nylon or polyester containing stabilizers and/or inhibitors to make the fabric resistant to deterioration from ultraviolet light. Filter cloth shall be of the type recommended by its manufacturer for the intended application.

n. Course Aggregate: The aggregate shall consist of washed crushed stone or gravel conforming to SCHD "Standard Specifications for Highway Construction", Section 406.09.

o. Rip Rap:

1. Material Quality: Stones shall be hard quarry of field stone and shall be of such quality that they will not disintegrate on exposure to water weathering. The stone shall be suitable in all respects for the purpose intended and shall conform with SCHD "Standard Specifications for Highway Construction", Section 804 except as modified herein.

2. Hand Placed Rip Rap: Stone for hand placing to a thickness of 12 inches shall range in weight from a minimum of 25 pounds to a maximum of 150 pounds. At least 50 percent of the stone pieces shall weigh more than 60 pounds. The stone pieces, except spalls, shall have a minimum dimension of at least 12 inches. Stone for hand placing to a thickness of 6 inches shall be no less than 3 inches in one dimension and no less than 6 inches in another dimension.

3. Dumped Rip Rap: Stone used in dumped rip rap shall be a quarried stone of reasonably uniform grading from the larger to the smaller pieces with the larger pieces preferable not above 24 inches in size.

4. Grouted Rip Rap: Grouted rip rap stone shall conform to the requirements for hand placed rip rap. The mortar for grout shall be composed of one part Portland Cement and three parts sand. The water content of the grout shall be such as to permit gravity flow into the interstices or voids with limited spading and brooming.

3.0 PIPE TRENCH EXCAVATION

a. Classification: Excavation shall be classified as defined in Section 02200.

b. Required Trench Dimensions: The trench shall be excavated by an approved method, to a depth to permit installation of the pipe along the lines and grades shown on the drawings. All side slopes for trench excavations shall be sloped by the Contractor to provide for safe working conditions by all personnel. The width of the trench shall be sufficient to allow thorough compacting of the backfill under and around the pipe. Where rock is encountered, the rock shall be removed to a depth below grade of at least 6 inches (6"), and the trench shall be refilled to grade with earth, sand, gravel, crushed stone or other suitable material as per the details on the drawings, firmly compacted to provide proper bedding for the pipe. Payment for rock will be to a depth of 6 inches below the invert and 12 inches on each side of the outside wall of the pipe.

c. Removal of Unsuitable Material: If directed by the Owner/Engineer, soft, mucky, or otherwise unstable or unsuitable material in the trench bottom shall be removed and replaced with crushed stone, or stabilized with crushed stone.

d. Notification of Rock or Muck Excavation: The Contractor shall notify the Owner/Engineer immediately if "Rock Excavation" or "Muck Excavation" is encountered. Rock removal or backfill shall not proceed until directed by the Owner/Engineer. Section 02200, Article 10 *Excavation* shall apply to "Rock Excavation" in trenches.

4.0 BRACING AND SHEETING

a. General Requirements: The sides of all trenches and excavations shall be adequately braced and sheeted to protect personnel, structures and property from slides, cave-ins, or settlement and to maintain the work clear of all obstructions. Bracing, shoring and sheeting shall comply with all applicable safety regulations governing the work. Full responsibility for the design, type and strength of shoring, sheeting and bracing shall rest with the Contractor.

5.0 DEWATERING

a. General Requirements: The Contractor shall do all pumping necessary for dewatering trenches and to provide safe, proper work conditions for installation of pipe and appurtenances. Pipe shall be installed on dry, stable trench bottoms.

6.0 BACKFILLING

a. General Requirements: Immediately after the pipes have been laid and checked, the trench shall be backfilled around the barrel of the pipe with fine materials, free, from large stones deposited in level layers no more than 6 inches (6") in depth, each layer to be thoroughly tamped and compacted before the next layer is deposited. Care should be exercised to avoid any wedging action or eccentric action upon or against any pipe or structure and to avoid any disturbance or damage to the work.

b. Backfilling in Traffic Areas: In roads, across sidewalks and driveways and at other places subject to vehicular traffic or other superimposed loads, trench backfilling material as specified above shall be compacted in 6 inch (6") layers for the full depth of the trench and consolidated in such a manner to provide an unyielding foundation for vehicular traffic. Unless otherwise shown on the plans or required by governing authorities, the compaction density shall be equal to the density of the original adjacent material. However, the minimum compaction density shall be 95% of maximum density according to ASTM D-698, except that the upper 18 inches (18") under the roadway and parking lots shall be compacted to 100% of maximum density.

c. Backfilling in Other Areas Subject to Superimposed Loads: Material for the lower portion of the trench, above required pipe bedding material, shall consist of fine, loose earth, free of large clods, stones, vegetable matter, debris, and/or other objectionable material. It shall have a moisture content suitable for thorough compaction. It shall be deposited in horizontal layers not to exceed 6 inches (6") in thickness (before compaction) on each side of the pipe. Each layer shall be thoroughly tamped or rammed around the pipe with approved hand or power driven tools until enough material has been placed and compacted to provide a cover of not less than 18 inches (18") over the top of the pipe, or as otherwise shown on the plans or as directed by the County Engineer. Minimum compaction shall be 95% of maximum density according to ASTM D-698.

d. Backfilling in Areas Not Subject to Superimposed Loads: In all other areas not subject to superimposed loads, trench backfill may be placed from the level 18 inches (18") above the top of the pipe upward in 12 inch (12") layers with light compaction by mechanical tampers, and without damage to the pipe. Such backfill may contain coarser material than specified in Paragraph 6 (c) above, but shall be free from brush, trash, perishable matter, or stones larger than 6 inches (6") in any dimension.

e. Maximum Stone Size: No rock or boulders shall be used in the backfill for at least one foot (1') above the top of the pipe and in the upper 18 inches (18"). No stone larger than six inches (6") in its greatest dimension shall be used in the backfilling.

f. Insufficient Fill Quantity: Any deficiency in the quantity of material for backfilling the trenches, or for filling depressions caused by settlement, shall be supplied by the Contractor as part of the Scope of Work.

7.0 DRAINAGE LINE CONSTRUCTION

a. Installation of Pipe

1. General Requirements: Under no circumstances shall pipe be laid in water, on rock, or when trench conditions of weather is unsafe or unsuitable for such work. Each pipe shall be carefully examined by the Contractor before being laid, and any defective or damaged pipe shall be removed from the site. Proper equipment shall be provided for lowering sections of pipe into trenches. The pipe shall be laid true to line and grade, beginning at the lowest point with the spigot end pointing in the direction of flow, with uniform bearing upon the pipe bed for the full length of its barrel. Raising the pipe off the subgrade (bridging) to obtain the proper elevation will not be allowed. Each section shall be securely attached to the adjoining sections by the method required for the type of joint used. When laying concrete pipe, all joints shall be thoroughly wetted with water and then filled with a stiff mortar composed of one part Portland Cement and two parts sand. The mortar shall be placed so as to form a durable water tight joint. The lower portion of the hub or groove of each section of pipe laid shall be thoroughly wetted and plastered on the inside with cement mortar of sufficient thickness to bring the inner surfaces of the abutting pipes flush and even. As each section of the pipe is put in place, the remainder of the joint so formed shall be thoroughly wetted and filled with mortar, and sufficient additional mortar shall be used to form a bead along the outside of the joint. The inside of the joint shall be wiped and finished smoothly. After the initial set, the mortar on the outside shall be protected from the air and sun with thoroughly wetted earth or burlap cover.

2. Optional Joint Sealant: As an option, each joint connection of pipe shall be made watertight using a flexible Butyl Resin Sealant according to the manufacturer's specification.

3. Reinstallation of Substandard Pipe: Any pipe which is not in true alignment, is damaged, or which shows undue settlement after laying shall be removed and reinstalled without extra compensation.

4. Joint and Fitting Installation: Pipe joints and fittings shall be made up in strict accordance with the manufacturer's directions.

5. Laser Alignment Control: Laser beams shall be used for grading pipe trenches and placing pipe.

b. Drainage Structures

1. General Requirements: Drainage structures shall be constructed as shown on the drawings, walls of brick, plumb and true, bottoms of concrete.

2. Brickwork: All brick shall be wet before being laid in warm weather. Brick shall not be laid in freezing weather. The Contractor shall protect all brick work from the weather when storming or freezing; and at all times when necessary during the progress of the work.

3. Setting Frames: Cast iron frames shall be set in a full bed of mortar and to the elevation established by the Owner/Engineer.

4. Backfilling: Backfilling around drainage structures shall be accomplished by methods and requirements as specified for backfilling pipe trenches.

c. Headwalls

1. General Requirements: Headwalls shall be constructed at locations indicated on the drawings, with the headwall details. Concrete and reinforcing bars shall be as specified.

d. Subdrain System

1. Procedure: Refill excavations cut below indicated depth with granular fill during placement of granular fill. Trenches for underdrain shall be excavated to a width equal to 3 times the outside diameter of the pipe and to a depth as required to lay the pipe at the desired grade. Provide granular fill a minimum of one pipe diameter on each side of the pipe and on the bottom of the pipe. Place in 6 inch lifts up to the level indicated or directed by the Landscape Architect. The pipe shall be placed in the center of the trench and bedded firmly on the bottom course of aggregate. If bell and spigot type is used, the bell end shall be laid upstream. Perforated pipe shall be laid with the perforations on the underside of the pipe. Lateral connections shall be made with suitable tee, wye, bend, reducer, or increaser fittings as required. The upstream end not terminating in a structure shall be capped, plugged, or fitted as directed by the Landscape Architect

2. Wrapping Perforated Pipe: Wrap PVC perforated pipe when indicated, with one layer of filter cloth, overlapping 6 inches at the longitudinal joint of the filter cloth. Wrap the filter cloth such that the edge of the outer layer points towards the bottom of the trench at the longitudinal joint and is in direct contact with the inner layer of the filter cloth. Obtain approval of filter cloth installation before placing fill. Place fill in a manner to prevent filter cloth damage or displacement.

3. Wrapping Drainage Trench: Provide a layer of filter cloth around the perimeter of the drainage trench. Filter cloth joints placed on the side of the drainage trench shall have the inner layer of filter cloth pointing towards the bottom of the trench. Unless specified otherwise, overlap filter cloth at joint a minimum of one foot. Repair damaged filter cloth by placing an additional layer of filter cloth over the damaged area, overlapping one foot in all directions.

e. Placing Rip Rap

1. Hand Placed Rip Rap: The thickness of hand placed rip rap shall be no less than that specified, measured perpendicular to the slope. The slope upon which this rip rap is to be placed shall conform with the cross section shown on the plans or as directed by the Landscape Architect. Depressions that may be filled in trimming and shaping shall be properly compacted. Rip Rap shall be firmly imbedded against the slope and the adjoining piece with the sides in contact and with well broken joints. The spaces between the larger pieces shall be filled with spalls of suitable size which shall be thoroughly rammed into place. The finished surface shall present an even, tight surface true to line, grade and section.

2. Dumped Rip Rap: Before placing of rip rap, the slopes and foundation trenches shall be constructed as necessary. The stone shall be handled or dumped into place so to produce a compact, well graded mass with a minimum percentage of voids. The material shall be placed to its full course thickness of 2 feet minimum, measured perpendicular to the slope, in one operation and in such manner that the slopes will be disturbed as little as possible. The larger pieces shall be well distributed and the finished layer of rock shall contain no segregated pockets of small pieces or groups of large pieces which would cause large open voids. Rearranging of the individual pieces by mechanical equipment, or by hand, may be required to the extent necessary to obtain a reasonably well graded distribution of sized as specified above. The surface of the completed rip rap shall be reasonably uniform in appearance, free from excessive humps or depressions.

3. Grouted Rip Rap: The aggregate, and method of placing the rip rap for grouted rip rap shall be as specified for hand placed rip rap. After the rip rap has been placed and approved, all interstices or voids between the stone shall be filled with mortar to a depth of not less than 4 inches below the surface of the stone. The face or surface of the stones shall be left reasonably free of grout. Plastering of the rip rap will not be permitted. The spaces between the stones shall be reasonably free of sand or other material and shall be wet during the placing of the grout.

f. Cleaning, Inspection and Testing

1. General Requirements: All storm lines, and drainage structures upon completion or at such time as directed shall be cleaned, inspected, and tested. The storm drain system shall have a true grade and line and shall be entirely clean and ready for use.

8.0 SITE CLEAN UP

a. General Requirements: The Contractor shall remove all excess material from excavations to points designated by the Owner/Engineer, and clean the site of the work of all debris collected during the construction.

END OF SECTION

RELATED DOCUMENTS: Attention is directed to related sections of the Specifications, as they pertain to to the guidelines, materials, and methods described in this section. Also, the General Provisions and Special Provisions of the Contract shall apply to all Sections of the Work.

1.0 GENERAL

a. General Requirements: This section includes furnishing all labor, materials, and equipment for the installation of all underground sewer lines, manholes, other appurtenances and structures as required for this project including clean up, testing and traffic maintenance.

b. Layout and Elevations: The layout of underground lines and invert elevations at governing points are shown on the drawings.

c. Connections and Changes in Direction: All connections and changes in direction shall be made with standard fittings or at manholes as shown on plans.

d. Compliance with Applicable Regulations: In addition to the requirements of these Specifications, all work shall comply with the requirements of current regulations of all governing authorities.

e. Limits of Construction: All work will be confined to the limits of street rights-of-way (existing and new) and utility easements as defined on the plans.

f. Adjustment of Manhole Tops: Tops of all manholes located within rough graded areas to be paved shall be set 6 inches above rough grade. All other manhole tops shall be placed above natural grade at the direction of the County Engineer. Manhole tops shall be adjusted to finished grade with a maximum of 5 courses of brick masonry or reinforced concrete grade rings. The maximum height adjustment with brick or rings shall be 13-1/4 inches.

i. Backfill and Compaction of Trenches in Traffic Areas: Backfill of all trenching in roads shall be compacted to 95% of maximum density obtainable according to the Standard Proctor test, AASHO T-99. In addition, trenches in existing or proposed roads shall be compacted to 100% maximum density in the upper 18" of the trench.

j. Backfill and Compaction of Trenches in Non-Traffic Areas: Backfill of trenching under proposed and existing right-of-way limits shall be compacted throughout the entire depth of the trench. All other trenching shall be overfilled with excess material to provide for settlement.

k. Traffic Control: The Contractor shall be responsible for conducting all work in streets, roads, and highways in accordance with any and all Regulatory Authorities' current requirements. As a minimum, for any work in State Highways, the Contractor shall meet the requirements of Traffic Controls for Street and Highway Construction and Maintenance Operations, Part V of the South Carolina Manual on Uniform Traffic Control Devices for Streets and Highways - 1982, latest revision.

g. Replacement of Damaged Paving, Utilities, or Structures: The Contractor shall replace all existing paving, utilities, and other structures which are damaged by the work or the Contractor's operations under this contract to the satisfaction of the County and in accordance with details on plans or with requirements by other governing bodies such as the State Highway Department or others. In no case shall the replacement be of lesser quality than the original installation.

h. Existing Underground Utilities: With respect to existing underground utilities, the following shall apply during the course of the project:

1. Precautions: Special precautions shall be taken by the Contractor to avoid damage to existing overhead and underground and underground utilities owned and operated by public or private utility companies or being newly constructed.

2. Limitations of Available Information Shown on Plans: With particular respect to existing underground utilities, all available information concerning their location has been shown on the plans. While it is believed that the locations shown are reasonably correct, neither the Design Engineer nor the County Engineer can guarantee the accuracy or adequacy of this information.

3. Coordination with Public Utilities Prior to Beginning Work: Before proceeding with the work, the Contractor shall confer with all public or private companies, agencies, or departments that own and operate utilities in the vicinity of the construction work. The purpose of the conference, or conferences, shall be to notify said companies, agencies or departments of the proposed construction schedule, verify the location of, and possible interference with, the existing utilities that are shown on the plans, arrange for necessary suspension of service, and make arrangements to locate and avoid interference with all utilities (including house connections) that are not shown on the plans. The County shall have no objection to the Contractor arranging for the said utility companies, agencies, or departments to locate and uncover their own utilities; however, the Contractor shall bear the entire responsibility for locating and avoiding or repairing damage to said existing utilities.

4. Palmetto Utlitity Protection Service: The Contractor shall notify Palmetto Utility Protection Service at 1-800-922-0983 at least 3 days prior to digging on the site.

5. Pipe Locator: It is suggested that the Contractor locate all unknown metallic hazards, namely buried pipe, metals, etc., by using a pipe locator.

6. Protection of Existing Utilities: When existing utilities or appurtenant structures, underground or above ground, are encountered, they shall not be displaced or disturbed unless necessary, and in such case shall be replaced in as good or better condition than found as quickly as possible.

7. Permanent or Temporary Relocation of Utilities: Permanent or temporary relocation and replacement of all utilities and appurtenant structures to accommodate the construction work shall be at the Contractor's expense.

2.0 MATERIALS

Note: All ASTM references shall be the latest version for the specific product.

a. Concrete: Concrete shall be 3000 psi mix using Portland Cement ASTM C-150, Type I, sand ASTM C-33 and coarse aggregate ASTM C-33. Ready-mixed concrete shall meet the requirements of ASTM C-94.

b. Welded Wire Fabric: Welded wire fabric shall conform to ASTM A-185.

c. Rebar: Reinforcing bars shall conform to ASTM A-615, new billet steel, intermediate grade.

d. Water: Water shall be potable, clean, free from oils, acids, alkalies, or organic or deleterious substances.

e. Masonry Materials: Masonry materials for manholes are detailed on plans as common clay or concrete brick. Concrete manhole block and pre-cast sections are equally as acceptable, subject to shop-print approval by the Engineer and County Authorities.

1. Common Brick: Common brick shall be standard size 2-1/4" x 3-3/4" x 8" shale or clay, hard, sound, well burned, free from lime or other unsuitable materials, ASTM C-32, Grade MM.

2. Concrete Brick: Concrete brick for sanitary manholes shall be standard size, ASTM C-90, Class A.

3. Concrete Block: Concrete block for sanitary manholes shall comply with ASTM C-139.

4. Precast Manholes: Precast concrete manhole sections shall be 4000 psi concrete, tongue and groove, steel fabric reinforced, cement mortar joints bitumastic sealed, in accordance with ASTM C-478. Precast manholes shall have a conical top, coursed with brick. Precast bottoms are permissible. Handling holes shall be plugged with mortar or stoppers. Rubber gaskets with stainless steel clamps shall be supplied to tie the pipes to the manhole pipe openings, and shall meet the requirements of ASTM C-923.

5. Portland Cement: Portland cement shall be from an approved manufacturer, ASTM C-150, Type 1.

6. Sand: Sand shall comply with ASTM C-144.

7. Flexible Butyl Resin Sealant: Flexible Butyl Resin Sealant shall comply with AASHTO specification M-198 B, similar to Butyl Tite or ConSeal or approved equal.

8. Mortar: Mortar for drainage structures shall be 1 part of Portland Cement, 10% hydrated lime, 2 parts sand by volume, mixed with sufficient water to form a plastic mortar.

9. Lime: Lime shall be hydrated, ASTM C-207, Type N.

10. Water: Water for masonry material shall be potable, free of suspended matter, injurious amounts of acids or alkalies, and contain no industrial or domestic wastes.

f. Vitrified Clay Pipe: Vitrified clay pipe for sanitary sewers and drain lines, shall be extra strength conforming to ASTM C-700 bell and spigot type. VCP joint quality shall equal requirements of ASTM C-425 as a minimum. VCP must be installed in accordance with ASTM C-12.

g. PVC Pipe: PVC gravity sanitary sewer pipe and related fittings shall be manufactured in accordance with all the requirements of ASTM D-3034 SDR 35, Type PSM polyvinyl chloride sewer pipe and fittings. PVC gravity sewer pipe shall be used as required on plans and shall be supplied in 13.0 foot normal lengths with laying bell-and-spigot joints. All fittings shall use rubber gaskets which conform to the requirements of ASTM F-477. PVC pipe must be installed in accordance with ASTM D-2321. Perforated PVC pipe for septic tank fields shall conform to ASTM F-405.

h. Cast Iron Rings and Covers: Cast iron manhole rings and covers are to be Sumter Machine Company ring No. MF-11 and cover No. MC-18, Dewey Bros., Inc., No. MH-RCR-1, or an approved equal meeting the requirements of ASTM A-48.

i. Ductile Iron Pipe and Fittings: Ductile iron pipe shall be manufactured in accordance with ASTM A-746 standard specification for ductile iron gravity sewer pipe. The minimum class pipe shall be Class 50 and shall be designed for an 8-foot minimum cover and a Type I laying condition. Pipe joints shall be the "Push-On" type manufactured in accordance with AWWA Standard C-

111-79. Fittings shall be ductile iron and rated as a minimum of equal the pressure rating of the pipeline.

j. Sewer Laterals: Pipe for sewer laterals shall be SCH 40 PVC conforming to ASTM D-1785 and ASTM D-2665 and Cast Iron Soil Pipe shall be service weight hub and spigot meeting Federal Specifications WW-401. Where boring is specified, cast iron soil pipe shall be used. The joints shall be rubber type elastomeric as per ASTM C-425. A minimum grade as specified by the South Carolina Building Code, plumbing, shall be maintained. Sewer laterals 4 inches in diameter shall be connected to the main by means of an in-line wye or a tap and saddle, installed over a hole cut in the top quadrant of the main at an angle of 45 degrees with respect to the direction of flow. The hole shall be cut with a mechanical hole cutter designed for the particular use and rendering a smooth, uniform cut with no damage to the main. Each lateral shall be sealed at the end with an approved watertight plug. Cleanout stack and cap shall be in accordance with the Construction Detailed Drawings.

k. Steel Casing Pipe: Casing pipe used at bore locations shall be seamless steel, ASTM A-139.80, Grade B with a minimum yield strength of 35,000 psi.

3.0 PIPE TRENCH EXCAVATION

a. Classification: Excavation shall be classified as either "common excavation" or "rock excavation". "Rock excavation" shall be such materials which cannot be removed by means other than by blasting or with air hammer. Materials which can be removed by ripping shall not be considered "rock excavation". "Common excavation" shall include all types of materials that do not fall into the category of "rock excavation" as defined above. Classification of excavation shall be determined by the County Engineer. It shall be the Contractor's responsibility to notify the County Engineer when rock excavation is encountered. The Contractor will not be credited for any rock quantities excavated before such notice is given.

b. Blasting Insurance: If conditions are such that blasting or any use of explosives is required, the Contractor, prior to blasting, shall submit to the Engineers satisfactory evidence of blasting and explosives insurance in the amounts of bodily injury and property damage insurance required in the Special Conditions and shall prove to the satisfaction of the Engineers the experience and capability of the Contractor's organization to safely handle and perform such operations.

c. Qualifications and Safety for Blasting: Handling and storing of blasting materials shall be performed only by qualified persons skilled in such work. Adequate precautions shall be taken to prevent accidents, injury to persons, or damage to property. Qualification of blasting operations personnel and safety precautions shall be in full compliance with local codes governing such operations.

d. Required Trench Dimensions: Full responsibility for the excavation and side slopes of all trenches shall rest with the Contractor. The trench shall be excavated to provide a safe work area to place the pipe, to a depth, to permit installation of the pipe along the lines and grades shown on the drawings. The width of the trench shall be sufficient to allow thorough compacting of the backfill under and around the pipe, and in no case shall be less than 18" greater than the outside diameter of the barrel of the pipe. Where excavation is in rock, the rock shall be removed to a depth below grade of at least 4" for pipes smaller than 30" diameter, and 6" for pipes 30" in diameter and larger; and before laying the pipe, the trench shall be refilled to grade with earth, sand, gravel or other suitable material, firmly compacted to provide proper bedding for the pipe.

e. Measurement of Rock Excavation: Measurements for payment of rock excavation shall not extend more than 6 inches below the pipe invert nor more than one (1) foot on each side of the pipe outside diameter for trenches less than six (6) feet deep. For deeper trenches

measurement for rock payment quantities to be established by the County Engineer and Contractor prior to excavation.

f. Trench Advancement: The amount of trench excavated ahead of pipe laying shall be subject to the approval of the County Engineer.

g. Trenching through Traffic Areas: The Contractor shall do all necessary bracing and bridging to maintain traffic during construction through areas affected by trenching.

h. Removal of Unsuitable Material: If directed by the County Engineer, soft, mucky, or otherwise unstable or unsuitable material in the trench bottom shall be removed and replaced with crushed stone or stabilized with crushed stone.

4.0 BRACING, SHEETING AND SHORING

a. General Requirements: The sides of all trenches and excavation shall be adequately braced and sheeted to protect personnel, structures and property from slides, cave-ins, or settlement and to maintain the work clear of all obstructions. Bracing, shoring and sheeting shall comply with all applicable safety regulations governing the work. Full responsibility for the design, type and strength of shoring, sheeting and bracing shall rest with the Contractor.

b. Removal of Shoring Materials: Sheeting, shoring or bracing materials shall not be left in place unless otherwise shown on the plans or ordered by the County Engineer. Such shall be removed in such manner that no danger of damage will occur to structures or property, public or private, and so that cave-ins or slides will not take place. Wood sheeting shall be left in place until backfill has been brought to a level 12 inches above the top of the pipe. It shall then be cut off and the upper portion removed before backfilling continues. Steel sheeting may be pulled in a manner approved by the County Engineer.

c. Clean-Up: All holes and voids left in the work by the removal of sheeting, shoring, or bracing shall be filled and thoroughly compacted.

5.0 PIPE LAYING

a. Handling: Pipe shall be carefully handled and placed to prevent breakage or other damage.

b. Alignment: All pipe shall be laid to a true straight line and uniform grade between angles or manholes, and shall in all cases rest on a firm bed, with bells laid up hill.

c. Resilient Joints For Clay Pipe: Resilient joints in clay pipe and fittings shall be made up in strict accordance with the manufacturer's directions.

d. Elevation Control: Laser Beams shall be used for grading pipe trenches and setting pipe. Pipe invert elevations at each manhole shall be checked by traditional survey methods using known benchmark(s). Manhole top elevations shall be set and adjusted by traditional survey methods using known benchmark(s).

e. Invert Elevations: All grades shown as pipe elevations are, unless otherwise noted, to the bottom of inside of pipe.

f. Horizontal Separation of Sewer and Water Mains: Water mains shall be laid at least 10 feet laterally from existing or proposed sewers, unless local conditions or barriers prevent a 10-foot lateral separation in which case the water main shall be laid in a separate trench, with the elevation of the bottom of the water main at least 18 inches above the top of the sewer. Distance measured is outside diameter to outside diameter.

g. Vertical Separation of Sewer and Water Mains: Whenever it is necessary for a water main to cross over a sewer, the water main shall be laid at such an elevation that the bottom of the water main is at least 18 inches above the top of the sewer, unless local conditions or barriers prevent an 18-inch vertical separation in which case both the water main and sewer shall be constructed of ductile iron and with joints that are equivalent to water main standards for a distance of 10 feet on each side of the point of crossing. Whenever it is necessary for a water main to cross under a sewer, both the water main and the sewer shall be constructed of ductile iron and with joints equivalent to water main standards for a distance of 10 feet on each side of the point of crossing, while maintaining a minimum of 18" vertical separation. A section of water main pipe shall be centered at the point of crossing. Distance measured is outside diameter to outside diameter.

h. Vertical Separation of Sewer and Storm Drains: When a sanitary sewer main must cross over or under a storm sewer, a vertical separation of 18 inches shall be maintained unless both lines are of ductile iron or encased in concrete. Distance measured is outside diameter to outside diameter.

i. Cleaning of Pipe: Pipe lines shall be kept cleaned out as the laying progresses and open ends kept securely stoppered.

k. Dewatering of Trenches: The Contractor shall do all pumping necessary for dewatering trenches and to provide proper work conditions for installation of pipe and appurtenances. Pipe shall be installed on dry, stable trench bottom.

l. District Standards: All sanitary sewer pipe and pipe bedding shall be installed in accordance with the applicable Sewer District or governing authorities' requirements.

6.0 BACKFILLING

a. Controlled Backfill: Controlled backfill, using fine material, shall be placed up to 18 inches above top of pipe in 6 inch layers and thoroughly mechanically tamped. Except in roadway areas, balance of backfill may be placed with the aid of dump trucks, bulldozers, cranes or other equipment, all subject to approval by the County Engineer. Where pipeline is located under paved roads or streets or within the right-of-way of these public thoroughfares, the backfill shall be consolidated in such a manner as to provide an unyielding foundation and excess materials shall be removed. Class I or Class II backfill materials as listed in ASTM D-2321 are to be used with PVC sewer pipe. Where high water tables or flowing water is or is likely to be present, Class I materials are to be used.

b. Succeeding Layers: Succeeding layers of backfill above the controlled backfill may contain coarser materials, and shall be free from brush or any other perishable or objectionable matter that would prevent proper consolidation or that might cause subsequent settlement, and shall be compacted thoroughly by use of mechanical tampers.

c. Compaction in Roadways: Compaction of trench excavations within roadway areas shall be no less than 95% of maximum density at optimum moisture content. The top 18" of backfill under roads shall be compacted to 100% of this specification. The method of test for maximum density shall be in accordance with AASHO T-99 (Standard Proctor Test). The material to be compacted shall be of the proper moisture content to obtain the prescribed density. The Contractor shall retain the services of an independent testing laboratory to perform all tests required under this section. Areas which do no meet the compaction requirements specified above shall be excavated and re-compacted. The cost of the initial test shall be paid for by the Contractor and any tests required as a result of improper compaction shall be paid for by the Contractor.

d. Maximum Stone Size: No stone larger than 6 inches in its greatest dimension shall be used in any part of the backfilling above the controlled backfill.

e. High Traffic Areas: Where it is important that the surface of the backfill be made safe for vehicular traffic as soon as possible, or where a permanent pavement is to be placed within a short time, the upper 12 inches of backfill shall be of approved moist material, thoroughly compacted to at least 95% maximum soil density in thin (4 inch) layers by tamping, and shall be brought to the required subgrade.

f. Insufficient Fill Quantity: Any deficiency in the quantity of material for backfilling the trenches or for filling depressions caused by settlement, shall be supplied by the Contractor from onsite borrow.

j. Restoration of Lawn and Landscaped Areas: Where trenching operations occur on "cultivated" grassed or landscaped areas, privately or publicly owned, or where the Contractor's operations disturb the operations of other Contractors on the project, the Contractor shall restore said property to its original state.

7.0 TESTING

a. General Requirements: After completion of any section of sewers and appurtenances, the pipe, joints and alignment shall be true to line and grade and joint surfaces shall be smooth. There shall be no visual leakage and the sewer shall be completely free from any cracks.

b. Visual Testing: All sewer installation shall be visually inspected from manhole to manhole by the use of mirrors and/or TV cameras. All lines shall exhibit a fully circular cross section, and shall be free of ponding, obstructions, and structural & surface defects. All deficiencies shall be corrected by the contractor prior to acceptance.

c. Air Testing: All sewer installation must be air tested in accordance with ASTM C-828, latest edition, in the presence of the Sewer District inspector with copies of the results sent to the Sewer District and County Engineer.

d. Deflection Testing: All PVC sewer installation shall be measured for vertical ring deflections. Deflection tests must be performed from manhole after the major portion of the initial soil consolidation has occurred, normally after 30 days, but not more than 12 months. The vertical ring deflection shall not exceed 5% of the vertical internal pipe diameter in any section measured, i.e. manhole to manhole. All pipe exceeding this deflection shall be considered to have reached the limit of their service ability and shall be relaid or replaced by the Contractor at no additional cost to the County. Deflection tests shall be accomplished by using a deflectometer, which will produce a continuous record of pipe deflection or by pulling a mandrel, sphere or pipe type (go/no-go) device through the pipe line. The diameter of the go/no-go device shall be 95% of the undeflected inside diameter of the pipe.

e. Infiltration Testing: Infiltration or exfiltration shall not exceed 200 gallons per hours per inch of diameter per mile of sewer. The maximum allowable for pipe 50" in diameter and larger shall be 10,000 gallons per 24 hours per mile. The Contractor shall make infiltration tests as directed by the Sewer District Engineer when the groundwater level is 18 inches or more above the top of the pipe.

e. Exfiltration Testing: When normal groundwater is not at a level to permit infiltration tests, the Contractor may be required to make exfiltration test at the discretion of the Sewer District Engineer. The method shall be to the satisfaction of the Sewer District Engineer. The tests may be made by filling the pipe or sections thereof with water to a head of two feet above the top of the pipe and observing the amount of water required to maintain this level or by air testing lines.

f. Manhole Tightness: There shall be no active leakage or seepage at manholes. The manholes shall be vacuum tested in accordance with ASTM C-1244-93 in the presence of the Sewer District inspector.

g. Testing to be Provided By the Contractor: All labor, materials, equipment, water, and services required for cleaning and testing shall be provided by the Contractor and at the expense of the Contractor. No separate payments will be made to the Contractor for cleaning or testing under either unit price or lump sum contracts.

h. Repair of Defective Areas in System: Sewer lines and appurtenances shall not be considered ready for acceptance until all provisions of the Contract Documents have been met, until all tests have been satisfactorily made, until final inspection of the work has been made by the Sewer District inspector, and until all defects have been corrected to the satisfaction of the Sewer District inspector. In case infiltration or exfiltration exceeds the specified rates, the sewers shall be repaired by the Contractor at no cost to the County until they will comply with the specified rates. Any defects determined during inspections by the Sewer District inspector shall be corrected by the Contractor to the satisfaction of the Sewer District and at no cost to the County.

8.0 CLEAN-UP

a. General Requirements: The sewer shall be clean on the inside and free from protruding joint materials, deposits of sand, mortar, earth, or other materials or debris on the inside of the pipe. Sewer lines and manholes shall be flushed and washed down if requested by the Engineer. On the site, the Contractor shall remove all excess material from excavations to points designated by the County Engineer, and clean the work areas of all debris collected during the construction.

9.0 EROSION CONTROL

a. General Requirements: The disturbed areas of large ditch and stream banks shall be riprapped each bank and each side of pipe centerline. Minimum total width riprapped shall be 12 feet. Stone may be from trench excavation, but shall have a minimum dimension of 12 inches.

10.0 GRASSING

a. General Requirements: The unpaved areas disturbed by construction of sewers shall be cleaned up, fine graded and grassed upon completion of the backfill/compaction operations.

END OF SECTION

RELATED DOCUMENTS: Attention is directed to related sections of the Specifications, as they pertain to the guidelines, materials, and methods described in this section. Also, the General Provisions and Special Provisions of the Contract shall apply to all Sections of the Work.

1.0 SCOPE OF WORK:

a. General Requirements: Furnishing all labor, materials, equipment and service required for the complete installation of new 4 foot high chain link fence surmounted with 3 strands of barbed wire as shown on the drawings and specified herein.

2.0 MATERIALS:

a. Fence Material: All fence material shall be hot dipped galvanized to produce a coating not less than 1.2 oz. Per square foot of base3 surface. Additionally, the fencing shall be 4' high with green vinyl coating to match the existing sections.

b. Fabric: Fabric shall conform to the applicable requirements of ASTM A 392 for 2 inch mesh and No. 9 gauge. End finish of fabric shall be twisted and barbed at both selvages.

c. Posts: Line posts shall be 2-1/2" O.D. standard pipe (Wt. 2/27 lbs. Per foot) or 2-1/4" x 1-7/8" High Carbon H-Beams or C Post with minimum material thickness of .121".

d. Rails: Top rail shall be 1-5/8" O.D. standard pipe (Wt.2/27 lbs. Per foot) or 1.625" x 1.25" channel section and shall be furnished in random lengths averaging not less than 20 ft., joined with extra long pressed steel sleeves, making a rigid connection but allowing for expansion and contraction.

e. Wire: Tension wire shall be No. 7 gauge galvanized coiled wire securely fastened to line and terminal posts.

f. Ties: Fabric Ties for attaching fabric to line posts and top rail shall be aluminum strip or wire.

g. End Posts: End and corner posts shall be 3" O.D. standard pipe (Wt. 5.79 lbs. per foot) or 3.5" x 3.5" channel section.

h. Swing Gate Posts: Swing gate posts shall be same as end posts, but in the following sizes and weights:

Pipe Size O.D.	Wt. Per Ft.	Gate Opening Single, Inclusive	Gate Opening Double, Inclusive
3"	5.79 lbs.	To 6'	Up to 12'
4"	9.11 lbs.	Over 6' to 13'	Over 12' to 26'

i. Sliding Gate Posts: Sliding gateposts shall be 4" O.D. pipe at 9.11 lbs. per lineal foot.

j. End and Gate Post Tops: Malleable iron, or aluminum sand castings, drive fitting outside of post to exclude moisture.

k. Brace and tension Bands: Unclimbable beveled edge type with 3/8" diameter square shouldered galvanized carriage bolts, non-removable from outer fence.

l. Bracing: All terminal posts shall be braced by means of a 1-5/8" O.D. horizontal compression member, (Wt. 2.27 lbs. per ft) or 1.625" x 1.25" channel section securely attached to terminal and first line posts with malleable iron or aluminum sand casted fittings, beveled edge bands, and truss braced from first line post to bottom of terminal post by 3/8" rod and take-up. Corner posts to be so braced in each direction.

m. Tension Bars: For attaching fabric to terminal posts, tension bars shall be 3/16" high x ¾" high Carbon Steel attached to round terminal posts by means of beveled edge bands.

n. Slide Gate Frames: Cantilever slide gate frames shall be of welded construction with vertical braces and truss rods to provide satisfactory structural strength and stability. Vertical members shall be 2" O.D. hot dipped galvanized pipe at 2.72 pounds per foot and horizontal members shall be Schedule 80, 2-1/2" O.D. hot galvanized pipe full weight. Gates shall be furnished with heavy-duty ball bearing rollers and guides with grease fittings fully adequate to provide smooth guided operation. Gates in excess of 20' in length shall have a back brace.

o. Swing Gate Frames: Swing gate frames shall be 2" O.D. standard pipe (Wt. 2.72 lbs. per ft) welded at all joints to provide rigid watertight construction.

p. Gate Frames: Gate frames shall be filled with same specification of fabric as is used in line of fence and shall have a keeper, which automatically engages the gate frame when swung open.

q. Hinges: Hinges shall be offset type allowing gates to swing parallel with line of fence and shall be malleable iron and forgings.

r. Operators: All swing and slide gate operators shall be manufactured by Overhead Door Corporation of Santa Ana, California or equal of proper size and horsepower as recommended by the manufacturer. Controls shall be push button type as manufactured by the same supplier as the gate.

s. Double Latch: Double latches shall be drop bar type securely bolted to gate frame and to engage a heavy malleable iron gate stop anchored in concrete footings.

t. Single Latch: Single latches shall be a malleable iron gravity type latch to automatically engage pin welded in gate frame. All latches readily locked with padlock.

u. Miscellaneous Fittings: All fittings entering into fence necessary to make a complete installation to be malleable iron or pressed steel and shall conform to ASTM A153.

v. Concrete: Concrete shall be 3000 psi compressive strength at 28 days, using ¾" maximum size aggregate.

3.0 EXECUTION:

a. Fencing & Gates: Fencing and gates shall be installed to line and grade as shown on the drawings. A graded fence line shall be established prior to the installation of fencing. The grade shall be such that a clearance of approximately 2" between the fence fabric and the ground shall be held along the line of the fence. The ground along the line of the fence shall be solid, and earth fill used to establish the fence line shall be thoroughly compacted. The fence line shall be cleared of all trees, brush, or other obstacles that will interfere with the fencing.

b. Excavation: Excavation for line and terminal posts and other concrete embedded items, in other than bedrock, shall be 9" diameter x 38" deep except for sliding gate posts, which shall be 15" diameter x 42" deep. If bedrock is encountered before reaching the required depth, the excavation shall be continued to the depth indicated or 18" into the bedrock, whichever is less,

and shall be a minimum of 2" larger in diameter than the outside diameter of the post. Waste material from excavation and postholes shall be cleared and spread where directed.

c. Posts: Posts shall be spaced at intervals not to exceed 10' center to center. Gateposts shall be spaced as necessary for the size of the gate openings. All posts shall be set, aligned and plumbed in holes 9" diameter and 38" deep with post embedment 36" (except sliding gate posts shall have 40" embedment). After the posts have been set, the holes shall be filled with concrete, except that where bedrock is encountered the holes shall be filled with grout. Concrete shall be thoroughly compacted, and exposed surfaces shall be crowned to shed water. Grout shall be thoroughly worked into holes to eliminate voids and exposed surfaces crowned to shed water.

d. Terminal Posts: Terminal posts which include end, corner, gate and pull posts shall be set and spaced as specified hereinbefore, and shall be braced to the nearest post with a horizontal brace used as a compression member, and a diagonal truss rod and truss tightener used as a tension member. All changes in direction of fence line of 30 degrees or more shall be considered as corners. Pull posts shall be used at all abrupt changes in direction of fence line of 30 degrees or more. Pull posts shall also be used at all abrupt changes in grade.

e. Top Rails: Top rails shall be installed prior to the installation of chain link fabric and shall pass through intermediate post tops to form a continuous brace from end to end of each stretch of fence. Top rails shall be joined with expansion couplings spaced to adequately allow for expansion and contraction of fence. Straight runs between braced posts shall not exceed 1500'. The top rail shall be securely attached to each gate, pull, brace, corner and end post.

f. Tension Wire: Bottom tension wire shall be installed on all fences, and shall be placed within 8" of the bottom of the fabric line. Straight runs between braced posts shall not exceed 1500'.

g. Barbed Wire: Barbed wire shall be installed on extension arms above fence posts, and on extension arms or end frame extensions above the gates. Each strand shall be pulled taut, and securely fastened to each extension in a manner recommended by the manufacturer.

h. Fabric: Fabric shall be set approximately 2" above the ground, and shall be installed on the outside of the fence. The fabric shall be cut at all terminal posts, and each span attached independently thereon. The fabric shall be pulled taut and fastened securely to each supporting post. Fastening to terminal posts shall be at 15" maximum intervals using stretcher bars and stretcher bar bands or other approved devices standard with the manufacturer. Fabric will be fastened to top rail every 24", and to line posts every 14".

i. Gate Operators: Install gate operators and controls to manufacturer's recommendations. All operators for double gates (where two (2) operators are used) shall be synchronized and operated by one (1) controller.

j. Waste: All waste fencing materials and other foreign matter shall be cleared from the fencing site at the completion of the work, and areas shall be left neat and orderly.

4.0 MEASUREMENT AND PAYMENT:

a. General: Payment shall constitute full compensation for all labor, equipment, tools, materials and other items necessary and incidental to completion of the work.

b. Lump Sum Contracts: For items of work which lump sum contracts are established in the contract, payment shall be made at the unit contract lump sum price based upon percentage of work completed.

END OF SECTION

RELATED DOCUMENTS: Attention is directed to related sections of the Specifications, as they pertain to to the guidelines, materials, and methods described in this section. Also, the General Provisions and Special Provisions of the Contract shall apply to all Sections of the Work.

1.0 SCOPE OF WORK:

a. General Requirements: Provide seedbed preparation, topsoiling, liming, fertilizing, seeding, sodding, and mulching of all newly graded finish earth surfaces, unless indicated otherwise, and at all areas inside of outside the limits of construction that are disturbed by the Contractor's operations.

2.0 MATERIALS:

a. Fertilizer and Lime: Deliver materials to the site in original, unopened containers bearing the manufacturer's chemical analysis, name, trade name, trademark, and indication of conformance to State and Federal laws.

b. Fertilizer: Commercial grade, free flowing, uniform in composition granular fertilizer shall contain a minimum percentage by weight of 10 percent nitrogen, 10 percent available phosphoric acid, and 10 percent potash. Apply fertilizer at the rate of 1000 pounds per acre.

c. Lime: Lime shall be commercial agricultural limestone containing a minimum of 94 percent of total carbonates, 80 percent calcium, and 14 percent magnesium. Agricultural limestone shall be incorporated into the soil at the rate of 2000 pounds per acre.

d. Seed: Deliver seed to the site in original sealed packages bearing the producer's guaranteed analysis for percentages of mixture, purity, germination, weedseed content, and inert material. Label in conformance with USDA Federal Seed Act and applicable State seed laws. Wet moldy, or otherwise damaged seed will be rejected. Seed shall be State-certified seed and of the latest season's crop. Mix seed on site according to the following mixtures by weight:

VARIETY	%GERMINATION	%PURITY	NOXIOUS WEEDS
Kentucky 31 Fescue	90%	98%	0%
Annual Rye	90%	98%	0%
Bermuda (hulled), Spring	90%	98%	0%
Bermuda (unhulled), Fall	90%	98%	0%

SEASON	VARIETY	RATE
Summer (May1-Aug1)	Common Bermuda (hulled)	3 lbs/1000 SF (130 lbs/Ac)
Fall / Winter (Sep1-Feb1)	Common Bermuda (unhulled)	3 lbs/1000 SF (130 lbs/Ac)
	Kentucky 31 Fescue	7 lbs/1000 SF
	Annual Rye	2 lbs/1000 SF
Spring (Feb1-May1)	Common Bermuda (hulled)	3 lbs/1000 SF
	Kentucky 31 Fescue	5 lbs/1000 SF
	Annual Rye	5 lbs/1000 SF

e. Mulch: Free from noxious weeds, mold, or other deleterious material. Provide wood cellulose fiber mulch when hydroseeding.

f. Straw: Stalks from oats, wheat, rye, barley, or rice. Furnish in air-dry condition and of proper consistency for placing with commercial mulch blowing equipment or by hand.

g. Wood Cellulose Fiber: Processed to contain no growth or germination-inhibiting factors and dyed an appropriate color to facilitate visual metering of material's application. Composition on air-dry weight basis: 9-15 percent moisture, pH range from 3.5 to 5.0.

h. Emulsified Asphalt Adhesive: ASTM D-977, Grade RS-1. Use with straw mulch.

i. Water: Suitable quality for irrigation.

j. Erosion Control Matting: Provide as specified in Section 02270 - "Erosion Control".

3.0 SEEDING:

a. Storage and Handling: Store lime, fertilizer, and seed in dry locations away from contaminants. Protect seed from drying out. Do not drop or dump materials from vehicles.

b. Soil Preparation: At the completion of rough grading, spread topsoil over areas to be seeded or as indicated, to a minimum thickness of 4 inches. Topsoil shall be the material stripped from the site during the grading operations. Do not spread topsoil when frozen or excessively wet or dry. Areas not receiving topsoil shall be loosened to a minimum depth of 4 inches before agricultural lime, fertilizer or seed is applied. Lawn areas shall be fine graded to a smooth, positively draining slope, removing all stones over one inch.

c. Seeding: Seed shall be sown within 24 hours following the application of fertilizer and lime, and preparation of the seedbed. Do not seed when the ground is muddy, frozen, snow covered, or in any unsatisfactory condition for seeding. If special conditions exist that may warrant a variance in the above seeding dates or conditions, submit a written request to the County Engineer stating the special conditions and proposed variance.

   Sow seed with approved sowing equipment using one or a combination of the following methods at the rate of 130 pounds per acre. Sow 1/2 the seed in one direction, and sow the remainder at right angles to the first sowing. For Drill, Broadcast, and Drop Seeding, incorporate fertilizer and lime into the soil to a minimum depth of 6 inches prior to seeding. For Hydroseeding, apply liquid fertilizer in amounts sufficient to promote the specified stand of turf and apply lime manually during subgrade preparation.

d. Drill Seeding: Use cultipacker seeders or grass seed drills. Drill seed uniformly to a maximum depth of 1/4 inch in clayed soils and 1/2 inch in sandy soils. Cover seed by spiketooth harrow, cultipacker, or other approved devices.

e. Broadcast Seeding and Drop Seeding: Use Broadcast or Drop Seeders. Cover seed uniformly to a maximum depth of 1/4 inch in clayey soil and 1/2 inch in sandy soils. Cover seed by spike tooth harrow, raking, or other approved devices. Immediately after seeding, firm entire area, except for slopes in excess of 3 to 1, with a roller not exceeding 90 pounds for each foot of roller width.

f. Hydroseeding: Mix seed, fertilizer, and wood cellulose fiber in required amount of water to produce a homogeneous slurry. After seed, water, and fertilizer have been thoroughly mixed, add 200 pounds of wood cellulose fiber per acre (dry weight) and apply the slurry. Seed shall not remain in water containing fertilizer for more than one hour prior to application, unless otherwise approved. Keep liquid fertilizer agitated during application. Immediately following application of slurry mix, make separate application of wood cellulose mulch at the rate of 800 pounds (dry weight) per acre. When hydraulically sprayed on the ground, material shall form a

blotterlike cover impregnated uniformly with grass seed. Cover shall allow rainfall of applied water to percolate to underlying soil.

g. Mulch: Except when hydroseeding, spread straw mulch evenly at the rate of 1.5 tons per acre. Anchor by crimping mulch with a serrated disc or by spraying asphalt emulsion on the mulched surface at the rate of 5 gallons per 1000 square feet. Take precautionary measures to prevent asphalt materials from marking or defacing structures, pavements, utilities, or plantings and do not use asphalt near pedestrian traffic areas.

h. Erosion Control Matting: Install as specified in Section 02270 - "Erosion Control".

i. Protection of Seeded Areas: Immediately after seeding, protect the area against traffic or other use by erecting barricades, as required, and placing approved signs at appropriate intervals until final acceptance.

4.0 SODDING:

a. Preparation of Sodbed: Prepare sodbed as specified for Soil Preparation and apply fertilizer and lime as specified.

b. Laying of Sod: Place first line of sod along straight walk, edging, building face, or staked string, and butt following courses closely to preceding courses, taking care that lateral joints do not coincide. Place boards over sod for foot traffic and tamp all pieces to insure total sod contact with sodbed. Lightly topdress with topsoil and/or sand and work into joint between sod pieces using a broom or mat. Thoroughly soak sodded area with water.After roots have developed sufficiently to hold sod firmly in place, allow surface to become quite dry and then apply additional topdressing of topsoil or sand to true the lawn surface. The sod shall then be rolled with a lawn roller to finish surface.

c. Interim Maintenance: Perform all maintenance operations necessary to properly care for sodded areas until they can be maintained by the County without danger of dislodgment or other significant damage to sod pieces.

d. Replacement of Sod: All portions of sodded areas shall give evidence of development into a smooth, homogeneous lawn of the material specified and shall have roots sufficiently developed to hold sod pieces in place during County maintenance operations. Sod which does not properly root and develop into a homogeneous lawn shall be replaced at no extra cost using the procedures specified above.

RESTORATION, ESTABLISHMENT, & FINAL INSPECTION

a. Restoration: Restore to original condition existing lawn areas which were damaged during grassing operations. Keep at least one paved pedestrian access route and one paved vehicular access route to each building clean at all times. Clean other paving when work in adjacent areas is complete.

b. Establishment Period: The establishment period will be in effect until the seeded and sodded areas are mowed three times. During the establishment period, the Contractor shall mow the seeded and sodded areas to an average height of 2 inches whenever the average height of grass reaches 4 inches. The Contractor shall remove excess clippings, eradicate weeds, water, fertilize, overseed, and perform other operations necessary to promote growth.

c. Final Inspection and Acceptance: At the end of the establishment period, final inspection will be made upon written request at least 10 days prior to the anticipated date. Final acceptance will be based upon a satisfactory stand of grass, defined as 95 percent ground cover of the

specified species. The Contractor will repair any bare spots over 2 inches square due to uneven seed distribution, drought specified planting dates.

d. Reseeding and Repair: Any areas that require reseeding and/or refertilization will be designated by the County Engineer. Any damage following seeding or if seedings are destroyed, the portion affected shall be repaired to re-establishment condition and grade of the soil prior to original seeding, and then reseeded following the above specifications.

END OF SECTION

RELATED DOCUMENTS: Attention is directed to related sections of the Specifications, as they pertain to the guidelines, materials, and methods described in this section. Also, the General Provisions and Special Provisions of the Contract shall apply to all Sections of the Work.

1.0 SCOPE:

a. General Requirements: Provide the work of this section as indicated and specified as follows:

1. Preparation of planting areas, including topsoil and soil amendments for beds.
2. Furnishing and installation of plants and related materials.
3. Furnishing and installation of sod and related materials.
4. Fine grading and seeding of lawns.
5. Interim maintenance of all work until acceptance.
6. Guaranty and replacement of all plant materials.

2.0 INSPECTIONS AND REPORTS:

a. Inspection Of Plant Material - all planting beds shall be prepared and all plant material shall be on site for an inspection by the County project manager prior to planting.

b. Punch list inspection - upon substantial completion of work.

c. Inspection for Acceptance of Work - upon completion of work.

d. Inspection for Final Approval - at end of Guaranty Period.

e. Report of Unfavorable Conditions - promptly notify the County project manager of adverse soil drainage conditions or other unfavorable conditions which would affect plant health. See later section concerning Subsurface Drainage Investigations.

3.0 TEMPORARY FACILITIES:

a. Protective Devices: Provide barricades, lanterns, signs, etc., necessary to protect the public from dangerous conditions resulting from work and to protect work from trespass.

b. Pavement Cleaning: Clean pavements at end of working day and before onset of inclement weather to prevent staining by or tracking of materials.

4.0 INSPECTION FOR ACCEPTANCE OF WORK:

a. Punch List Preparation: When work had been substantially completed; except for very minor items, Contractor shall notify the County project manager that work is ready for Punch List Inspections. The County project manager or representative, within a reasonable time, will check the work and prepare a Punch List stating observed deficiencies of work which need correction prior to Acceptance Inspection. The Punch List is for the Contractor's convenience and shall not relieve him of any obligations of the Contract. The County project manager may waive this requirement upon consultation with the Landscape Contractor.

b. Preparation for Acceptance Inspection(s): Contractor is expected to review Contract Documents and to inspect work to determine that all requirements have been met prior to Acceptance Inspection(s). All items on the County's punch list shall also have been attended to prior to Acceptance Inspection(s).

c. Acceptance of Work: After Inspection, Contractor will be notified of Acceptance of work in writing by the County provided work offered for acceptance comprises all required work entirely completed, but exclusive of possible future replacement of plants. Final payment will be due at this time.

5.0 GUARANTY, INSTRUCTIONS, INSPECTIONS, AND REPLACEMENTS:

a. Guaranty: All trees, shrubs, and ground covers shall be guaranteed to have acceptable appearance, to be alive and healthy, and to have exhibited vigorous normal growth for one full year from date of acceptance of the work. Seeded and sodded areas shall be guaranteed for 1 full year. All seeded areas shall have a vigorous stand comprising 100% coverage of all seeded areas. (No bare areas or washout areas).

b. Maintenance Instructions: Contractor shall provide to County two written copies each of adequate and reasonable maintenance procedures to be followed by the property owner(s) during the one year Guaranty Period.

c. Contractor's Inspections of Owner's Maintenance: During guaranty period, Contractor shall make periodic visits to site (especially during times of unusually severe weather conditions) to inspect plants installed and guaranteed by him. If he should determine that conditions such as maintenance which are not directly under his control are not sufficient to sustain plants, he shall promptly file written notice with the County project manager stating his findings and giving recommendations for corrections. If insufficient maintenance or other damaging condition continues, Contractor may request that the County inspect the site and make a determination of the situation.

e. Voiding of Plant Guaranty: If the County project manager concurs with Contractor after inspection, the Contractor may then file written notice with the County that unless proper maintenance or other necessary work has been completed by a reasonable given date, and sustained thereafter, the terms of Plant Guaranty will become null and void for all or stated portions of work.

f. Dead or other Unsatisfactory Plants: Remove promptly upon discovery, and during periodic visits; mark location with stake to facilitate future replacement.

g. Replacements: All replacements required under Guaranty shall be made at no cost to the County or private property owner during earliest favorable weather and season following original specifications unless directed otherwise by the County project manager. The County project manager shall be notified in writing if and when any replacements are made.

h. Satisfaction of Guaranty: Near end of Guaranty Period, the County project manager or representative shall determine if plants are in satisfactory condition. When all plants are acceptable to the County, the Contractor shall be notified and will be relieved of the responsibility of any further replacements.

6.0 GRADING FOR LAWNS:

a. Fine Grading: Fine grading of all lawn areas is to be performed by the Contractor.

7.0 SUBSURFACE DRAINAGE INVESTIGATION:

a. Required Tests: Subsurface drains have not been included as part of project, therefore, Contractor shall make such reasonable percolation tests approved by the County project manager as may be necessary to determine if subsurface drainage conditions in landscape areas are so poor as to support moisture conditions potentially fatal to plantings. The following procedure is recommended:

1. Wait at least 24 hours after rain and dig test pit 12 inches square to depth of bottom of plant bed, trench or pit; remove all loose soil (if standing water is visible, notify the County project manger).

2. Quickly fill pit bottom with 6 inches (approximately 3-1/4 gallons) of water.

3. Record length of time from filling until disappearance of water and divide number of minutes by 6 to give average of 1 inch fall.

4. Compare 1 inch fall time with following table:

TIME INTERVAL	SOIL CONDITION
0 - 3 Minutes	Rapid Absorption
3 - 5 Minutes	Medium Absorption
5 - 30 Minutes	Slow Absorption
30 - 60 Minutes	Semi-Impervious
Over 60 Minutes	Impervious

b. Impervious or Semi-Impervious Condition: If soil is indicated to be semi-impervious or impervious, or if water is initially found in test pit, notify the County project manager before proceeding further.

c. Contractor Responsibility for Subsurface Water Damage: If Contractor does not make tests at representative locations and file records of results with the County project manager, or if he plants in areas shown to have poor drainage without written release from Owner, he shall be liable for any future guaranteed replacements due to subsurface water damage. If Contractor makes proper tests and files complete records indicating no semi-impervious or worse conditions, he will not be held responsible for future subsurface water damage to work of Contract. The County project manager may supervise testing at any time.

d. Relocation or Omission of Plants: Where subsurface conditions provide inadequate drainage and subsurface drainage system is not to be used as remedy, make reasonable relocation of plants as directed by the County project manager. Drainage conditions necessitating omission of plants shall be covered by Change Order.

e. Authorization of Drains as Extra Work: The County project manager or representative may authorize installation of subsurface drains to alleviate moisture problems at locations determined by the County project manager or representative. Perform work at agreed extra cost; begin work only after receipt of Change Order. Locations, appropriate materials, and construction techniques will be agreed upon prior to issuance of Change Order.

8.0 TOPSOIL:

a. Source of Topsoil: If obtained from off-site locations, use well-drained sites not previously stripped.

b. Soil Characteristics: Natural, friable, fertile, fine, loamy soil representative of topsoils in job site vicinity which produce heavy growth.

c. Cleanliness: Free of subsoil, objectionable weeds, litter, sods, stiff clay, stones larger than 1 inch diameter, stumps, roots, trash, toxic substances, or any matter harmful to plant growth or a hindrance to installation or maintenance.

d. Moisture Content: Not frozen or muddy when delivered or spread.

e. Soil Depth: Depth of topsoil shall depend on depth required to fine grade site to finish grade, but in no case shall the depth of topsoil be less than 4 inches in all areas shown on the plans to receive topsoil.

f. Clean-Up: Before the placement of any topsoil, all objectionable material shall be removed from the subgrade to a depth of not less than 12 inches.

g. Placement: Areas to receive topsoil (including all planting beds) to be disked and pulverized to a depth of 12-16" before the placement of topsoil.

9.0 SOIL CONDITIONING MATERIALS:

a. Aluminum Sulfate: Unadulterated, in manufacturer's original unopened container labeled with analysis and net weight. Use to acidify soil (lower pH).

b. Limestone: Raw, ground agricultural limestone, containing at least 90 percent calcium carbonate; 90 percent shall pass No. 10 sieve and 50 percent pass No. 50 sieve. Use to decrease acidity of soil (raise pH).

c. Peat: Domestic or imported material consisting of at least 50 percent partially de-composed vegetable matter of natural occurrence, brown in color, clean, low in mineral and woody content, mildly acid, and either granulated or shredded.

10.0 FERTILIZERS AND LIME:

a. Fertilizer: Shall be 16-4-8 slow release fertilizer as manufactured by Pendleton Oil Mill, Pendleton, South Carolina at the rate of 30-lbs./1000-sq.ft. Other blends and manufacturers of fertilizer are acceptable provided they are approved by the County project manager before application. Fertilizer will be delivered mixed as specified, in standard unopened containers showing weight, analysis, and name of manufacturer. Fertilizer to be kept dry at all times to insure retention of effectiveness and free-flowing composition. Bulk delivery and spreading is acceptable when authorized by the County provided the Contractor supplies the County with written affidavit certifying weight and analysis of fertilizer.

b. Lime: Ground dolomitic limestone acceptable as agricultural limestone containing not less then 85% of total carbonates shall be applied at the rate of 50-lbs./1000 SF (not less than 2000 lbs per acre). Lime shall meet requirements of Section 810, SCHD Standard Specification, Edition 1973. Liming operation shall be sufficient to provide a pH of 6.5.

c. Soil Incorporation: In areas to be seeded or sodded, all of required lime (50-lbs./1000-sq.ft.) and fertilizer (50-lbs./1000-sq.ft.) shall be thoroughly and evenly incorporated with the soil to a minimum depth of 4 inches (4") by disking or other approved methods. In areas inaccessible to power equipment, it shall be incorporated with the soil by use of hand tools.

11.0 PLANT MATERIALS:

a. Nomenclature: Names of plants required for use as trees, shrubs, vines, groundcovers, etc., conform generally with names accepted in nursery trade, but authority in case of dispute shall be STANDARDIZED PLANT NAMES, Second Edition, American Joint Committee on Horticulture, 1942, J. Horace McFarland Company, Harrisburg, Pennsylvania.

b. Specifications: Except when stated otherwise, specifications refer to standards for nursery stock, published by the American Association of Nurserymen, Washington, D.C. In case of conflict of stated measurements use greater requirement.

c. Abbreviations: Terms abbreviated hereinafter may include:

Balled and Burlapped	B&B
Division	DIV.
Espalier	ESP.
Clump	CLP.
Container Grown	CONT.

d. Substitutions and Alternatives: Plants specified shall be used unless sufficient evidence is submitted to the County project manager indicating plant is unavailable from sources east of Mississippi River and south of Kentucky and Virginia (unless source has been otherwise specified) and upon request of filed Change Order authorizing substitution.

e. Substitution of B&B and Container Plants: Root types may be freely substituted in case of B&B and Cont., all other specifications remaining unchanged.

f. Alternate Material: If alternate has been specified, it may be used only for entire quantity of original material without prior approval of the County project manager.

g. Condition of Plants Supplied: Well-shaped within normal habit of growth; sound, healthy, vigorous, of proper color and free from insects, pests, disease or physical injury.

12.0 SOD MATERIAL:

a. Material Quality: Sod shall be dense, well rooted sod composed of approximately 2" of roots and soil. It shall be free of weeds, debris or other undesirable grasses.

b. Chemical Treatment: Sod shall not be treated with any chemical herbicide or insecticide for a minimum of 7 days prior to cutting and transport to the site.

c. Transport & Handling: Sod must be kept moist for protection and to facilitate handling. Sod shall be rolled in tight rolls or laid on boards or planks and lifted and transported to storage piles or carried to the point of installation without breaking or tearing. No sod shall be dumped from vehicles, it must be loaded and unloaded by hand or by such methods as not to disturb root mat.

d. Storage: Sod shall not remain in storage piles longer than 24 hours and it shall be protected from wind and rain during such storage periods.

13.0 SEED MATERIAL

a. Material Quality: Grass Seed shall be certified, fresh, clean, new crop composed of the following varieties having the indicated quality.

VARIETY	%GERMINATION	%PURITY	NOXIOUS WEEDS
Kentucky 31 Fescue	90%	98%	0%
Annual Rye	90%	98%	0%
Bermuda (hulled), Spring	90%	98%	0%
Bermuda (unhulled), Fall	90%	98%	0%

b. Standards and Requirements: All seed shall meet the requirements of the Seed Laws of the State of Georgia and the U.S. Department of Agriculture Rules and Regulations under the Federal Seed Act in effect on the date bids are received.

c. Delivery and Storage: Seed shall be delivered in standard unopened containers with seed quality tag affixed. Seed which has become wet, moldy or damaged in transit or storage will not be acceptable.

d. Rate of Application: Grass areas shall be sown with Bermuda (hulled) at the rate of 3-lbs./1000-sq.ft., Annual Rye at the rate of 2-lbs./1000-sq.ft. and Kentucky 31 Fescue at the rate of 5-lbs./1000-sq.ft.

e. Hydraulic Seeding:

1. Hydroseeding may be substituted for mechanical seeding with the County project manager's approval.

2. Seed Rates:

K-31 Fescue	15 lbs per 1000 SF
Common Bermuda	5 lbs per 1000 SF

3. Seed shall be sown using with 500 lbs. per acre approved hydromulch (i.e., Conwed, Conwed 2000, Weyerhaeuer, etc.).

4. Hydromulch at 2000 lbs. per acre will then be applied in a separate operation.

5. Any material applied to building, lighting fixtures, fencing or paving shall be removed at Contractor's expense.

6. Note: Soil amendments will be applied mechanically and incorporated into the soil, not applied hydraulically.

14.0. STAKING, GUYING AND WRAPPING MATERIALS:

a. Tree Stakes: Sound, durable lumber with minimum uniform cross-section above point of 2 x 3 inches nominal dimensions, capable of withstanding above ground and underground conditions until Final Acceptance.

b. Guy Stakes: Sound, durable lumber with minimum uniform cross-section above point of 2 x 3 inches nominal dimensions, capable of withstanding above ground and underground conditions until Final Acceptance; or steel rod, minimum of 1/2 inch diameter.

c. Guy Wires: No. 12 gauge, malleable, galvanized iron wire, twisted into double strand, turn buckles optional.

d. Protective Encasement: Material to cover guy wire where looped around trees shall be two-ply, 1/2 inch minimum diameter reinforced rubber hose or approved comparable, non- injurious product, length sufficient to properly protect trunk.

e. Trunk Wrapping Material: Commercial tree wrapping product of bituminous impregnated tape, heavy crepe paper, or other approved material 4 to 12 inches wide.

f. Twine: Not less than a two ply jute twine or comparable non metallic material of neat, inconspicuous appearance.

15.0 MULCH AND EDGING MATERIALS:

a. Pine Straw Mulch: Free of bark, sticks, pine cones.

b. Materials Specified as Requiring Approval: Secure representative sample(s) and arrange for Owner to inspect; if disapproved, resubmit additional sample(s) until approved; keep approved sample for reference until near end of project before incorporating it in work.

c. Other Materials will be inspected upon Contractor's request; otherwise, inspection may take place at any time. Maintain sample(s) for reference.

16.0 GENERAL SEEDING PROCEDURES:

a. Seed Bed Preparation: Soil to be leveled off and raked smooth for reception of seed.

b. Fine Grading: All seed beds shall be fine graded so as to insure positive drainage. Areas graded so as to allow "birdbaths" and accumulation of silt and/or water which is detrimental to the establishment of turf will not be acceptable.

c. Seed Application: Seeding shall take place immediately after the incorporation of lime and fertilizer into the soil. The required amount of seed should be applied by an accepted method utilizing a minimum of two (2) passes at right angles over the prescribed area.

d. Rolling & Surface Compaction: Immediately after seeding, the entire area shall be compacted by means of a culti-packer, roller or approved equipment weighing approximately 90-lbs. (90#) per linear foot roller. A pneumatic roller (not wobble-wheel) will be required if the soil is of such type that satisfactory operation cannot be obtained through use of a smooth or corrugated roller. Final rolling of the area shall be at right angles to existing slopes to prevent any erosion by runoff.

17.0 GENERAL SODDING PROCEDURES:

a. Subgrade Preparation: Preparation of the subgrade and fine grading shall be as outlined in 16.0 GENERAL SEEDING PROCEDURES.

b. Orientation: Sod shall be rolled out in the orientation as directed by the County project manager or representative.

c. Laying Sod: The rolls of sod shall be lain to provide tight joints between abutting rolls. No pieces of sod of less than 12" square shall be lain in any location.

d. Rolling: After the sod is in place it shall be rolled with a roller consisting of a minimum of 50 lbs. per linear foot of roller length.

e. Repair of Depressed Areas: After rolling, any depressions of greater than 1" within an 18" radius shall be filled by removing the sod and placing soil in the depression sufficient to bring the sod up to grade. Any depressions under 1" in an 18" radius shall be brought to grade by a topdressing of sand.

f. Watering: The Contractor shall be responsible for keeping all sod watered during sodding operations. After all sod is in place, watering shall be the responsibility of the private property owner.

18.0 GENERAL PLANTING PROCEDURES:

a. Preplanting Care: Fully protect plants from damage by sun, wind, drought, water and other injurious conditions during transportation to site and during temporary storage before planting. Store B&B plants heeled-in individually; mulch around container plants. Water plants as necessary until planting time.

b. Time of Planting: Plant under favorable weather conditions. At option of and under full responsibility of Contractor, planting operations may be conducted under unseasonable conditions without additional compensation.

c. Plant Quantities: A Materials List is provided in Drawings summarizing quantities of major materials required. Under lump sum contract, Contractor shall be wholly responsible for confirming quantities shown on Drawings and on List, for promptly reporting any discrepancy to the County project manager before bidding and for performing all work required by the Drawings and Specifications.

d. Plant Locations: Place individual plant pits, beds and trenches as indicated in Drawings. Make reasonable adjustments as directed by the County project manager or representative. Staking of layout is recommended, but optional.

e. Obstructions:

1. At or Below Grade: Remove where possible. Man-made obstructions such as functioning utilities, irrigation systems, etc. shall be avoided and not disturbed. Natural objects too massive to be removed with tractor mounted backhoe will require plant relocations as directed by the County project manager or representative.

2. Above Ground: Report overhead interference such as telephone or power lines and relocate plantings as directed.

3. Repairs: Promptly inform the County project manager of any damage and repair any damage to utilities, etc.

19.0 EXCAVATION OF PLANT LOCATION:

a. Tree and Shrub Pits: Dig pits with vertical sides to 6 inches deeper than depth of root ball, make diameter 1 foot greater than ball diameter of root spread; remove excavated subsoil from site.

b. Trenches and Beds: Dig out entire area to 6 inches below plant roots and to lines 6 inches outside root ball diameters or root spread; remove excavated subsoil from site. Beds for groundcovers shall be excavated at least 8 inches deep. All plant beds should be a constant

grade to facilitate the proper installation of metal edging. The County project manager or representative shall inspect each bed prior to planting.

20.0 PREPARATION AND PLACEMENT OF PLANTING SOIL MIXTURE:

a. Mixture for Trees and Shrubs: Homogenous blend of 1/3 (by volume) peat or finely ground pine bark and 2/3 topsoil with necessary soil conditioners added. Place and compact mixture to 6 inch depth in bottom of pit, bed or trench; reserve enough mixture for backfill. Incorporate fertilizer in proper season.

b. Groundcover Beds: Till and pulverize soil to depth of 12-16" inches. Add fertilizer according to common horticultural practice.

c. Treatment of Planting Beds with Post-Emergent Herbicides: All planting beds which have existing vegetative cover shall be treated with an approved post-emergent herbicide prior to bed preparation. The herbicide shall be Round-Up or Paraquat (or approved equal) according to season. Follow manufacturer's recommendations as to rate and method of application with special emphasis on the time the chemical must be in place prior to a rain. The herbicides shall be used strictly in accordance with the manufacturer's directions with respect to the effective and safe application of such toxic substances.

d. Treatment of Planting Beds with Pre-Emergent Herbicides: After bed preparation, all planting beds shall be treated with Ronstar G., Treflan or a comparable pre-emergent herbicide, that will not harm the type plants to be installed in the beds. These herbicides shall be used strictly in accordance with manufacturer's directions as to application quantity, methods and precautions to be used for effectively and safely applying such a toxic product.

21.0 SETTING TREES AND SHRUBS:

a. Orientation: Place each plant in vertical position and rotate to obtain visual appearance and proper relationship to nearby buildings or adjacent plants.

b. Root and Ball Preparation: Remove container from Cont. plants and lightly scarify sides of the root mass. Remove burlap from around trunk of B&B material.

c. Crown to Grade Relationship: After settlement, crown of root ball shall remain a minimum of 2 inches above average finished grade with compacted planting soil sloping away from trunk or stem and blending with finished grade.

d. Backfill: Fill remaining hole with planting soil mix; compact lightly and create saucer to trap water. Soak pit, trench or bed thoroughly with water soon after planting.

22.0 WRAPPING AND STAKING OR GUYING OF TREES:

a. Time: Stake or guy each tree promptly after planting.

b. Wrapping: Use on high-branched trees; not required on trees branched to ground. Apply insecticide to trunk and then begin wrapping at ground; neatly and snugly spiral wrapping upward with minimum 1-1/2 inch overlap; stop above lowest branch. Tie wrapping securely but not tight enough to constrain trunk growth. Do not wrap River Birch.

c. Trees, 2" Caliper or Less: Use one or more stakes of length sufficient for height and spread of tree (top of stake shall be at least 4 feet above grade for safety reasons) and locate per Drawings. Do not sever roots. Secure tree to stake with hose encased wire or other approved

tie device; keep guys or ties as low as possible on trunk to encourage more rapid root establishment.

d. Trees over 2" Caliper: Use 3-point support system per Drawings. Method is optional unless only a staking or only a guying detail is shown; then use only method detailed.

e. Wires: Encase each wire encircling a tree trunk with hose or other protective device to prevent bark abrasion. Tighten wires and maintain them taut; turnbuckle use is optional.

f. Flags: Place warning flags on guy wires in areas of pedestrian or maintenance hazard.

g. Removal of Stakes and Guys: Remove as soon as danger of overturning has passed.

23.0 SETTING GROUNDCOVERS:

a. Shaping Bed: Finish grade per Drawings to required contours and provide positive surface drainage.

b. Plant Spacing: Unless otherwise specified, center to center spacing of plants refers to planting bed surface plane, NOT a horizontal plane. Quantity estimates include allowances for such variation.

c. Root Preparation: Remove container plants and scarify roots in several places before placing in position.

d. Position of Plants: Place each plant in vertical position or in a manner that will provide best coverage. On steep slopes, this may mean axis of plant is not vertical.

e. Crown to Grade Relationship: Place crown high enough so plant will not be smothered by mulch. Slope planting mix upward from finished grade to meet crown.

f. Backfilling and Watering: Fill around roots with planting soil mixture and firmly compact, and form water saucer. Soak bed thoroughly with water soon after planting.

g. Mulching Groundcovers on Steep Slopes: After planting apply pine straw mulch 4" thick.

24.0 FERTILIZER APPLICATIONS:

a. Time of Application: Apply at time of planting or promptly thereafter; except do not apply during period of August 16th through March 1st unless otherwise directed by Landscape Architect.

b. Methods of Application:

1. Commercial Granules: Spread on soil surface (under mulch) or preferably mix into planting soil at specified rate. Uniform distribution is essential.

2. Tablets: Place as recommended by manufacturer.

c. Rates of Application: Follow manufacturer's recommendations based upon plant sizes.

25.0 PLACEMENT OF MULCH:

a. Time and Purpose: Place mulch to required uniform depth soon after planting to prevent drying of planting soil around roots. Unless other operations such as top dressing or fertilization necessitate delay, mulch promptly after planting. Do not delay more than 3 days after plants have been set.

b. Mulch Depths:

TREES AND SHRUBS	4" Depth, over entire saucer, bed, or trench
GROUNDCOVERS	2" Depth
PLANTING BEDS	4" Depth

26.0 PRUNING AND REPAIR OF PLANTS:

a. Time and Purpose: Prior to inspection for Acceptance of work, perform minor pruning of plants to remove any growth damaged during handling, to compensate for root loss, or to enhance visual appearance as instructed by the County project manager or representative.

b. Care of Cuts and Abrasions: Where surface of any pruning cut exceeds 3/4 inch diameter, thoroughly apply tree wound paint. Where minor abrasions into living tissue may exist, cut back injured cambium per good arborculture practice and thoroughly apply tree wound dressing.

27.0 REPLACEMENT OF PLANTS:

Any plants to be replaced prior to Acceptance of work or under terms of Guaranty shall be installed following procedure set forth above.

a. Standard for Acceptance of Plantings: Each plant shall be of proper type, properly installed and maintained in good health. All water saucers and beds shall be neatly mulched and free of weeds and erosion damage.

b. Clean-Up, Protection, and Repairs: During landscape work, protect materials from loss, damage and deterioration during storage, installation and maintenance periods. Protect from unauthorized persons (trespassers) and landscape operations. Wherever possible, avoid replacement of damaged work, by treating or repairing to restore work to an acceptable condition as directed by the County project manager or representative.

END OF SECTION

GREENVILLE COUNTY, SOUTH CAROLINA
MERRIFIELD STORMWATER IMPROVEMENTS

WOOLPERT
2000 Center Point Road
Suite 2200
Columbia, SC 29210
803.731.0261
FAX: 803.731.0132

NOTE: THE FOLLOWING IS A LIST OF JURISDICTIONAL AGENCIES KNOWN TO HAVE PERMIT AUTHORITY OVER THE SUBJECT PROPERTY. APPROVALS SHOULD BE OBTAINED PRIOR TO COMMENCEMENT OF CONSTRUCTION.

ENTITY	PERMIT NO.	APPROVAL DATE	EXPIRATION DATE
SCDHEC	SCR10AS37	10/12/16	–
GREENVILLE COUNTY ENGINEERING	–	–	–
–	–	–	–
–	–	–	–

SITE PLAN

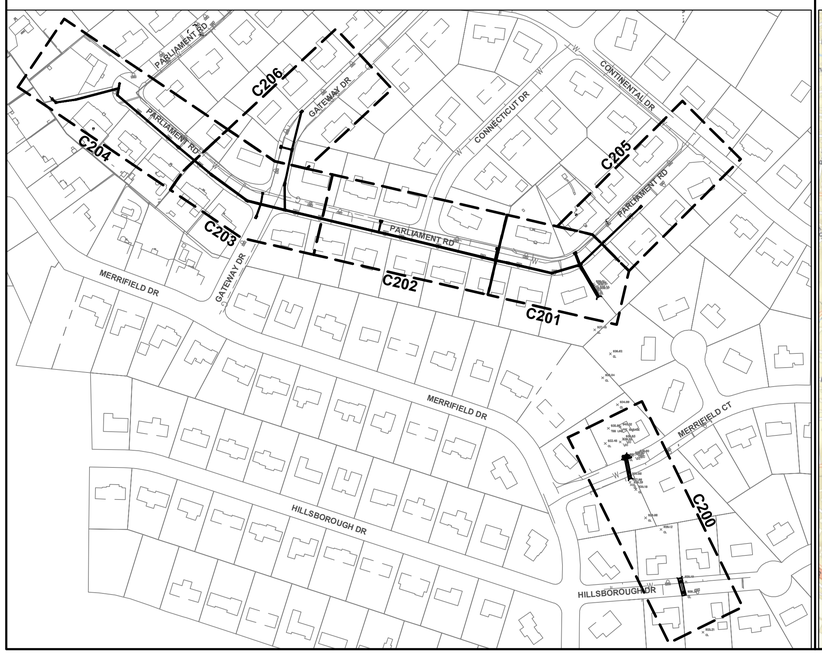

VICINITY MAP

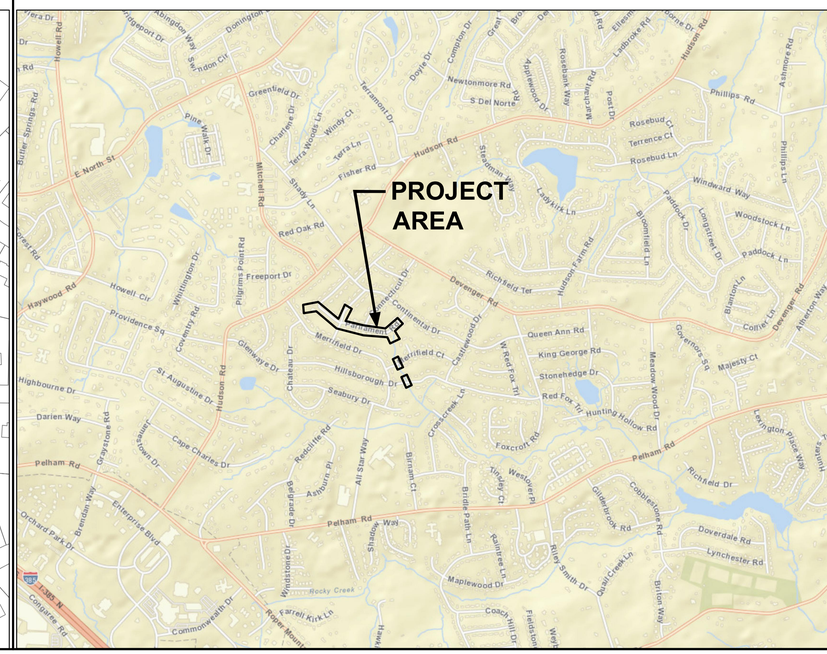

SHEET INDEX

●	–	04/04/16	C000..... COVER SHEET
●	–	04/04/16	C001..... GENERAL NOTES
●	–	04/04/16	C100–C102..... EXISTING CONDITIONS
●	–	04/04/16	C200–C206..... PLAN & PROFILE SHEETS
●	–	04/04/16	C300–C306..... DETAILS

DRAWING INDEX LEGEND

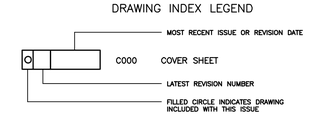

No.	DATE	REVISION
1	6/1/16	PER COUNTY REVIEW
2	9/26/16	PER SC DHEC
3	10/17/16	PER COUNTY

PROJECT No.: 74840

SEAL

CDA

GENERAL NOTES

1. ALL CONSTRUCTION SHALL BE PER "SCDOT STANDARD SPECIFICATIONS FOR HIGHWAY CONSTRUCTION", LATEST EDITION AND SCDOT SUPPLEMENTAL SPECIFICATIONS AS APPLICABLE.

2. ALL MATERIALS, CONSTRUCTION, AND PLANS ARE TO COMPLY WITH CURRENT GREENVILLE COUNTY STANDARD SPECIFICATIONS AND DETAILS.

3. DETAILS REFERENCING SCDOT STANDARD DRAWINGS REFER TO THE "SCDOT STANDARD DRAWINGS FOR ROAD CONSTRUCTION," LATEST EDITION.

4. PRIOR TO COMMENCEMENT OF CONSTRUCTION, THE CONTRACTOR SHALL ATTEND A PRE-CONSTRUCTION CONFERENCE.

5. LOCATION OF ALL IMPROVEMENTS SHALL BE ACCORDING TO THE APPROVED DRAWINGS AND CONSTRUCTION PLANS. ANY CHANGES MUST BE APPROVED BY THE ENGINEER PRIOR TO CONSTRUCTION.

DESIGNER/ENGINEER:
CARLA MUSCARELLA PE, PROJECT MANAGER
WOOLPERT
2000 CENTER POINT ROAD, SUITE 2200
COLUMBIA, SC 29210
PHONE: (678)537-8912
EMAIL: CARLA.MUSCARELLA@WOOLPERT.COM

SURVEY FIRM:
FANT, REICHERT, & FOGLEMAN, INC.
25 WOODS LAKE ROAD, SUITE 705
GREENVILLE, SC 29607
OFFICE-(864) 271-8633
FAX-(864) 271-3299
PNF@FRFINC.NET

6. CONTRACTOR SHALL NOTIFY THE ENGINEER FORTY-EIGHT (48) HOURS PRIOR TO OPEN CUTTING DRIVEWAYS.

7. THE CONTRACTOR SHALL RESTORE THE GROUND BY RESEEDING AND MULCHING ALL DISTURBED AREAS. DAMAGED CURB, SIDEWALKS AND DRIVEWAYS SHALL BE REPAIRED TO THEIR ORIGINAL CONDITION.

8. THE CONTRACTOR WILL BE PROVIDED WITH A STAGING AREA AT A LOCATION DETERMINED BY THE COUNTY. IT IS THE CONTRACTOR'S RESPONSIBILITY TO PREPARE AND MAINTAIN THIS FACILITY TO HIS NEEDS. THE CONTRACTOR SHALL BE RESPONSIBLE FOR RESTORING THIS AREA TO THE CONDITION HE RECEIVED IT IN.

9. THE CONTRACTOR WILL CONFINE HIS OPERATIONS TO WITHIN THE COUNTY'S RIGHTS-OF-WAY AND ANY CONSTRUCTION EASEMENTS SHOWN ON THE PLANS.

10. THE CONTRACTOR SHALL HIRE A PROFESSIONAL TESTING FIRM TO PROVIDE ALL TESTING OF MATERIALS AND CONSTRUCTION AS REQUIRED BY THE SCDOT STANDARD SPECIFICATIONS. COPIES OF TEST RESULTS SHALL BE PROVIDED TO THE ENGINEER OF RECORD.

11. THE EXISTING CONDITIONS (TOPOGRAPHIC, PLANIMETRIC AND UTILITY INFORMATION) SHOWN ON THESE PLANS IS A COMPILATION OF INFORMATION OBTAINED FROM FIELD SURVEY PREFORMED BY FANT, REICHERT & FOGLEMAN, INC, SUPPLEMENTED BY GIS.

12. REPAIR OF DAMAGED PAVEMENTS SHALL COMPLY WITH THE REQUIREMENTS OF THE SOUTH CAROLINA DEPARTMENT OF TRANSPORTATION "STANDARD SPECIFICATIONS FOR HIGHWAY CONSTRUCTION" AND DRAWINGS.

MAIL BOXES NOTES

1. THE CONTRACTOR SHALL GIVE THE POSTMASTER OF THE DELIVERY ROUTE AND THE PROPERTY OWNER WRITTEN NOTICE OF PROJECT CONSTRUCTION AT LEAST SEVEN (7) CALENDAR DAYS PRIOR TO THE BEGINNING OF WORK.

2. PATRONS SHALL HAVE THE OPTION OF REMOVING THEIR EXISTING MAILBOX OR LEAVING THE MAILBOX IN PLACE FOR REMOVAL BY THE CONTRACTOR. REMOVAL BY THE CONTRACTOR SHALL BE INCLUDED IN THE CONTRACT UNIT PRICE FOR MAILBOX REMOVAL AND INSTALLATION AS EACH. INSTALLATION TO INCLUDE WOODEN POST, MOUNTING BRACKETS, PLATES, PLATFORM AND ACCESSORY HARDWARE SHALL BE INCLUDED IN THE CONTRACT UNIT PRICE FOR MAILBOX REMOVAL AND INSTALLATION AS EACH.

3. CONTRACTOR SHALL RE-USE THE EXISTING MAILBOX AND SUPPORT WHENEVER POSSIBLE. WHEN NOT PRACTICAL, THE CONTRACTOR SHALL PROVIDE AND INSTALL A NEW MAILBOX OF METAL CONSTRUCTION ONLY, IN TRADITIONAL STYLE SIZE 1 AS PRESCRIBED BY THE DOMESTIC MAIL MANUAL OF THE US POSTAL SERVICE. MAILBOX PRODUCTION STANDARDS, LIST OF APPROVED MANUFACTURES AND SUPPLIERS, DESIGN APPROVAL AND INSTALLATION GUIDANCE MAY BE OBTAINED THRU THE RURAL DELIVERY DIVISION, DELIVERY SERVICE DEPARTMENT, OPERATIONS GROUP OF THE USE POSTAL SERVICE, WASHINGTON DC 20260

LAYOUT NOTES

1. ALL DIMENSIONS, STATIONING, COORDINATES, ELEVATIONS, ETC. SHOWN ON THESE PLANS ARE IN FEET UNLESS OTHERWISE NOTED.

2. ALL DIMENSIONS AND COORDINATES IN CURBED AREAS SHALL BE FACE TO FACE OF CURB. ALL DIMENSIONS AND COORDINATES IN AREAS WITHOUT CURB SHALL BE TO EDGE OF PAVEMENT. ALL DIMENSIONS FROM BUILDING SHALL BE FROM FACE OF BUILDING.

3. PROVIDE SMOOTH TRANSITION FROM NEW AREAS TO EXISTING FEATURES AS NECESSARY.

DEMOLITION NOTES

1. DEMOLISH AND COMPLETELY REMOVE FROM SITE, EXISTING UNDERGROUND UTILITIES, CURBS, DRIVEWAYS, PAVEMENTS & TREES INDICATED TO BE REMOVED. TO MINIMIZE INTERRUPTIONS, COORDINATE WITH UTILITY COMPANIES FOR SHUT-OFF OF SERVICES, IF LINES ARE ACTIVE.

2. THE REMOVAL, DEMOLITION AND DISPOSAL OF EXISTING FACILITIES TO BE REMOVED ARE THE CONTRACTOR'S RESPONSIBILITY.

3. ANY EXISTING PAVEMENTS NOTED TO BE REMOVED FROM THE SITE SHALL BE PROPERLY DISPOSED OF IN A LEGAL MANNER. THE CONTRACTOR SHALL SAW CUT EXISTING ASPHALT AND/OR CONCRETE SURFACES PRIOR TO REMOVAL UNLESS OTHERWISE DIRECTED BY THE ENGINEER. SAW CUT WIDTH SHALL BE 1 FT MINIMUM FROM THE EXISTING EDGE OF PAVEMENT. SAW CUT PAVEMENT SHALL BE REPLACED AS WELL AS ADDITIONAL PAVEMENT REQUIRED TO TIE-IN TO FACE OF PROP. CURB AND GUTTER.

4. CONTRACTOR SHALL REMOVE FROM THE SITE AND DISPOSE OF LEGALLY, ANY AND ALL MATERIALS AND DEBRIS WHICH RESULT FROM CONSTRUCTION OPERATIONS.

5. CONTRACTOR SHALL PROPERLY NOTIFY AND COORDINATE DEMOLITION WITH COUNTY REPRESENTATIVE PRIOR TO COMMENCEMENT.

6. OWNER MAILBOXES WITHIN THE LIMITS OF CONSTRUCTION SHALL BE TEMPORARILY RELOCATED WITHIN THE LOT LIMITS IF NECESSARY. MAILBOXES SHALL BE RESET

TRAFFIC CONTROL NOTES

1. TRAFFIC CONTROL SHALL BE IMPLEMENTED IN ACCORDANCE AS APPLICABLE.

2. TRAFFIC CONTROL SIGNS AND BARRICADES SHALL BE INSTALLED AND MAINTAINED DURING CONSTRUCTION TO ALLOW LOCAL TRAFFIC ALONG ROADWAYS DURING CONSTRUCTION. THE CONTRACTOR SHALL COMPLY WITH THE LATEST EDITION OF THE MANUAL ON UNIFORM TRAFFIC CONTROL DEVICES AND SCDOT "STANDARD DRAWINGS FOR ROAD CONSTRUCTION.

3. THE CONTRACTOR SHALL BE RESPONSIBLE FOR ANY DAMAGES CAUSED BY THE LACK OF TRAFFIC CONTROL MEASURES.

4. CONTRACTOR SHALL SUPPLY TEMPORARY BARRICADES OR DETOUR SIGNS NECESSARY FOR THE SAFETY & DIRECTION OF TRAFFIC. CONTRACTOR SHALL PROVIDE THE COUNTY WITH A MINIMUM OF 48 HOUR NOTICE PRIOR TO ANY ROAD CLOSING.

UTILITY NOTES

1. THE CONTRACTOR SHALL NOTIFY UTILITY COMPANIES WHOSE LINES ARE WITHIN THE PROJECT AREA PRIOR TO CONSTRUCTION AND SHALL COORDINATE ANY RELOCATIONS TO THE EXISTING UTILITIES. CONFLICTS WITH THE EXISTING UTILITIES SHALL BE RESOLVED BETWEEN THE CONTRACTOR AND THE RESPECTIVE UTILITY COMPANY. ANY UTILITIES DAMAGED DURING CONSTRUCTION SHALL BE REPAIRED BY THE CONTRACTOR. ALL RELOCATIONS SHALL BE NOTED ON THE FIELD DRAWINGS. RELOCATIONS MAY INCLUDE BUT ARE NOT LIMITED TO SANITARY SEWER LATERALS, WATER SERVICE LINES, GAS SERVICE LINES, TELEPHONE AND POWER LINES.

2. SEVENTY-TWO (72) HOURS BEFORE DIGGING IN SOUTH CAROLINA, CALL PALMETTO UTILITY PROTECTION SERVICE, INC. (PULS) AT 811 (IN SOUTH CAROLINA) OR 1-888-721-7877, MONDAY THROUGH FRIDAY BETWEEN THE HOURS OF 7:30 – 5:30 (EST).

3. WATER SERVICE LINES AND SANITARY SEWER LATERALS TO BE RELOCATED SHALL MEET THE SPECIFICATIONS AND DETAILS OF GREENVILLE COUNTY. THE LOCATION AND DEPTH OF SANITARY SEWER SERVICES SHALL BE VERIFIED PRIOR TO DRAINAGE INSTALLATION. CONFLICTS SHALL BE EVALUATED BY THE COUNTY OR ENGINEER OF RECORD.

4. A PRE-CONSTRUCTION MEETING SHALL BE HELD WITH THE ENGINEER, COUNTY REPRESENTATIVE AND UTILITIES PRIOR TO BEGINNING WORK.

5. THE CONTRACTOR OR CONTRACTOR'S SURVEYOR SHALL PROVIDE "AS-BUILT" DRAWINGS OF PUBLIC AND PRIVATELY OWNED STORM DRAINAGE INSTALLATIONS (INCLUDING DETENTION BASINS AND WATER QUALITY FACILITIES) TO THE ENGINEER OF RECORD. "AS-BUILT" DRAWINGS SHALL BE PREPARED & SEALED BY A LICENSED SURVEYOR IN THE STATE OF SOUTH CAROLINA. DRAWING SHALL INCLUDE RIM ELEVATIONS, INVERT ELEVATIONS, LOCATION OF UNDERGROUND UTILITIES (VERTICAL & HORIZONTAL) TO INCLUDE FITTINGS AND APPURTENANCES. AS-BUILTS MUST BE APPROVED BEFORE PROJECT CLOSEOUT.

6. SANITARY SEWER MAINS TO BE REMOVED & REPLACED TO FACILITATE BOX CULVERT. INSTALLATION SHALL BE ACCOMPLISHED IN NON-PEAK HOURS.

7. RESIDENTS TO BE AFFECTED BY WATER MAIN RELOCATION SHALL BE NOTIFIED AT LEAST 48 HOURS IN ADVANCE

GRADING NOTES

1. BURNING IS NOT PERMITTED.

2. CLEARING AND GRUBBING LIMITS SHALL BE LIMITED TO AREAS DISTURBED BY GRADING OPERATIONS.

3. ADJUST ALL EXISTING CATCH BASINS, MANHOLES, AND OTHER STRUCTURES TO GRADE, AS REQUIRED UNLESS NOTED OTHERWISE.

4. ELEVATIONS SHOWN REFER TO FINISHED GRADE, UNLESS NOTED OTHERWISE.

5. EXCESS TOP SOIL AND RESIDUAL CUT MATERIALS, AS WELL AS DEMOLITION MATERIALS ARE TO BE REMOVED FROM THE SITE AND SHALL BE DISPOSED OF LEGALLY.

6. ALL GRADED, UNPAVED, DISTURBED AREAS SHALL BE SPREAD WITH TOPSOIL, SEED, MULCH, FERTILIZER, AND SHALL HAVE WATER APPLIED UNTIL A HEALTHY STAND OF GRASS IS OBTAINED.

7. THE CONTRACTOR SHALL SCHEDULE AND COORDINATE WITH THE GEOTECHNICAL ENGINEER TO HAVE TRENCH COMPACTION TESTS PERFORMED. COMPACTION TESTS SHALL BE PERFORMED AND DOCUMENTED FOR EACH FILL LIFT. LIFTS IN FILL AREAS SHALL NOT EXCEED 8" IN DEPTH, AND SHALL BE REDUCED IN DEPTH IF NECESSARY TO MEET THE COMPACTION REQUIREMENTS.

8. COMPACTION OF SUBGRADE SURFACES SHALL BE AS FOLLOWS: STRUCTURES AND DRIVE AISLES (BELOW 18 INCHES OF SUBGRADE), AND TRENCHES: 95% STANDARD PROCTOR DENSITY (ASTM D698); LAWN OR UNIMPROVED AREAS: 90%; BUILDING AND PAVEMENT SUBGRADES (TOP 18 INCHES): 100%.

9. WHERE ENCOUNTERED, ALL UNSUITABLE MATERIALS SHALL BE REMOVED AND BACKFILLED WITH STRUCTURAL FILL.

10. CONFINE DISTURBED AREAS TO A MINIMUM. ALL TREES, AND OTHER VEGETATION SHALL REMAIN UNLESS SHOWN OTHERWISE ON THE DRAWINGS FOR THEIR REMOVAL IS AUTHORIZED BY THE OWNER. ALL AREAS DISTURBED BY THE CONTRACTOR DURING CONSTRUCTION SHALL BE SEEDED PER THE SPECIFICATIONS.

STORM DRAINAGE NOTES

1. UNLESS OTHERWISE NOTED, THE DESIGN STORM DRAINAGE PIPE IS CLASS III REINFORCED CONCRETE PIPE WITH TONGUE AND GROOVE JOINTS MEETING ASTM C76. SHOULD THE USE OF CORRUGATED METAL OR H.D.P.E. PIPE BE ALLOWED, THE INVERT ELEVATIONS MAY REQUIRE REVISION.

2. TOP OF GRATE AND RIM ELEVATIONS INDICATED FOR DROP INLETS AND MANHOLES ARE AT THE CENTER OF THE GRATE OR COVER. TOP OF GRATE ELEVATIONS INDICATED FOR CURB INLETS ARE AT THE EDGE OF THE ADJOINING PAVEMENT.

3. ALL PIPES ENTERING STORM STRUCTURES SHALL BE GROUTED TO ASSURE THE CONNECTION IS WATERTIGHT.

4. ALL FIELD TILE ENCOUNTERED SHALL BE REPLACED AND/OR CONNECTED TO THE STORM SEWER SYSTEM AND LOCATED AND IDENTIFIED ON "AS-BUILT" PLANS BY THE CONTRACTOR.

5. 2" WEEP HOLES & STONE DRAINS SHALL BE INSTALLED AT ALL DROP INLETS AND CURB INLETS.

6. STORM MANHOLES SHALL BE SET SUCH THAT THE MANHOLE TOP IS FLUSH WITH ADJACENT GRADES.

7. FOUNDRY FRAME, GRATE AND HOOD IDENTIFIED FOR REFERENCE. CONTRACTOR MAY USE APPROVED EQUAL WITH ENGINEER'S APPROVAL.

8. CONTRACTOR SHALL BE REQUIRED TO CLEAN PROPOSED DRAINAGE SYSTEMS PRIOR TO ACCEPTANCE BY OWNER.

10. NO STRUCTURES MAY BE CONSTRUCTED WITHIN 10 FEET OF ELECTRIC LINES OR FACILITIES.

11. CURB INLETS SHALL BE OFFSET FROM EXISTING EDGE OF PAVEMENT BY 1 FT GUTTER. CURBS SHALL TAPER 4' UP AND DOWN GRADIENT FROM EDGE OF BOX.

12. All DRAINAGE STRUCTURES SHALL MEET SPECIFICATIONS OF SCDOT (LATEST EDITION) OF THE ROADWAY STANDARD DRAWINGS, SECTION 719. INLETS TO BE CONSTRUCTED OVER PROPOSED BOX CULVERT STRUCTURES SHALL BE MODIFIED TO MEET PROPOSED CONDITIONS AS DIRECTED BY PRECASTER. REFER TO THE FOLLOWING STANDARD DRAWINGS FOR ADDITIONAL INFORMATION:

INLET TYPE:	STD DWG No.:
TYPE 1	719-001
TYPE 16	719-016
TYPE 17	719-017
TYPE 18	719-018
MANHOLE	719-505
BOX CULVERT	722-XXX

13. FABRICATION & INSTALLATION OF BOX CULVERT PIPE, HEADWALL & WINGWALLS SHALL COMPLY WITH SECTION 722 OF THE SCDOT STANDARD SPECIFICATIONS. WINGWALLS SHOWN IN THE PLAN SET ARE FOR INFORMATIONAL USE.

14. CONTRACTOR SHALL MINIMIZE STREAM DISTURBANCE AS MUCH AS POSSIBLE. IMPACT IS LIMITED BY THE CONDITIONS SET FORTH BY NATIONWIDE PERMIT 43

15. SHOP DRAWINGS IN INCLUDE FOUNDRY FRAME GRATE & HOOD SHALL BE PROVIDED TO THE OWNER FOR REVIEW & APPROVAL PRIOR TO INSTALLATION.

LANDSCAPE NOTES

1. ALL DISTURBED AREAS NOT TO BE COVERED BY IMPERVIOUS SURFACE SHALL RECEIVE A MINIMUM OF 4" OF TOPSOIL AND BE SEEDED AND MULCHED OR SODDED AS SPECIFIED ON SHEET C300. TEMPORARY GRASSING SHALL BE INSTALLED AS FOLLOWS:

TIFWAY (T-419) BERMUDA SOD AREAS AS INDICATED ON PLANS.

2. CONTRACTOR IS RESPONSIBLE FOR WATERING AND MAINTAINING ALL LANDSCAPING UNTIL PROJECT IS COMPLETED.

3. DO NOT INSTALL DURING PERIODS OF WET OR FROZEN SOIL CONDITIONS.

4. EXISTING TREES TO REMAIN & TREES ADJACENT TO OR WITHIN THE CONSTRUCTION LIMITS SHALL BE ROOT PRUNED TO THE EXISTING DRIP LINE. TREE PROTECTION SHALL BE INSTALLED TO PROTECT AGAINST DAMAGE DUE TO CONSTRUCTION ACTIVITIES.

EROSION CONTROL NOTES

1. IF NECESSARY, SLOPES, WHICH EXCEED EIGHT (8) VERTICAL FEET SHOULD BE STABILIZED WITH SYNTHETIC OR VEGETATIVE MATS, IN ADDITION TO HYDROSEEDING. IT MAY BE NECESSARY TO INSTALL TEMPORARY SLOPE DRAINS DURING CONSTRUCTION. TEMPORARY BERMS MAY BE NEEDED UNTIL THE SLOPE IS BROUGHT TO GRADE.
2. STABILIZATION MEASURES SHALL BE INITIATED AS SOON AS PRACTICABLE IN PORTIONS OF THE SITE WHERE CONSTRUCTION ACTIVITIES HAVE TEMPORARILY OR PERMANENTLY CEASED, BUT IN NO CASE MORE THAN FOURTEEN (14) DAYS AFTER WORK HAS CEASED, EXCEPT AS STATED BELOW.
   - WHERE STABILIZATION BY THE 14TH DAY IS PRECLUDED BY SNOW COVER OR FROZEN GROUND CONDITIONS STABILIZATION MEASURES MUST BE INITIATED AS SOON AS PRACTICABLE.
   - WHERE CONSTRUCTION ACTIVITY ON A PORTION OF THE SITE IS TEMPORARILY CEASED, AND EARTH-DISTURBING ACTIVITIES WILL BE RESUMED WITHIN 14 DAYS, TEMPORARY STABILIZATION MEASURES DO NOT HAVE TO BE INITIATED ON THAT PORTION OF THE SITE.
3. ALL SEDIMENT AND EROSION CONTROL DEVICES SHALL BE INSPECTED ONCE EVERY CALENDAR WEEK. IF PERIODIC INSPECTION OR OTHER INFORMATION INDICATES THAT A BMP HAS BEEN INAPPROPRIATELY OR INCORRECTLY INSTALLED, THE PERMITTEE MUST ADDRESS THE NECESSARY REPLACEMENT OR MODIFICATION REQUIRED TO CORRECT THE BMP WITHIN 48 HOURS OF IDENTIFICATION.
4. PROVIDE SILT FENCE AND/OR OTHER CONTROL DEVICES, AS MAY BE REQUIRED, TO CONTROL SOIL EROSION DURING UTILITY CONSTRUCTION. ALL DISTURBED AREAS SHALL BE CLEANED, GRADED, AND STABILIZED WITH GRASSING IMMEDIATELY AFTER THE UTILITY INSTALLATION. FILL, COVER, AND TEMPORARY SEEDING AT THE END OF EACH DAY ARE RECOMMENDED. IF WATER IS ENCOUNTERED WHILE TRENCHING, THE WATER SHOULD BE FILTERED TO REMOVE SEDIMENT BEFORE BEING PUMPED BACK INTO ANY WATERS OF THE STATE.
5. ALL EROSION CONTROL DEVICES SHALL BE PROPERLY MAINTAINED DURING ALL PHASES OF CONSTRUCTION UNTIL THE COMPLETION OF ALL CONSTRUCTION ACTIVITIES AND ALL DISTURBED AREAS HAVE BEEN STABILIZED. ADDITIONAL CONTROL DEVICES MAY BE REQUIRED DURING CONSTRUCTION IN ORDER TO CONTROL EROSION AND/OR OFFSITE SEDIMENTATION. ALL TEMPORARY CONTROL DEVICES SHALL BE REMOVED ONCE CONSTRUCTION IS COMPLETE AND THE SITE IS STABILIZED.
6. THE CONTRACTOR MUST TAKE NECESSARY ACTION TO MINIMIZE THE TRACKING OF MUD ONTO PAVED ROADWAY(S) FROM CONSTRUCTION AREAS AND THE GENERATION OF DUST. THE CONTRACTOR SHALL DAILY REMOVE MUD/SOIL FROM PAVEMENT, AS MAY BE REQUIRED.
7. RESIDENTIAL SUBDIVISIONS REQUIRE EROSION CONTROL FEATURES FOR INFRASTRUCTURE AS WELL AS FOR INDIVIDUAL LOT CONSTRUCTION. INDIVIDUAL PROPERTY OWNERS SHALL FOLLOW THESE PLANS DURING CONSTRUCTION OR OBTAIN APPROVAL OF AN INDIVIDUAL PLAN IN ACCORDANCE WITH S.C REG. 72-300 ET SEQ. AND SCR100000.
8. TEMPORARY DIVERSION BERMS AND/OR DITCHES WILL BE PROVIDED AS NEEDED DURING CONSTRUCTION TO PROTECT WORK AREAS FROM UPSLOPE RUNOFF AND/OR TO DIVERT SEDIMENT-LADEN WATER TO APPROPRIATE TRAPS OR STABLE OUTLETS.
9. ALL WATERS OF THE STATE (WOS), INCLUDING WETLANDS, ARE TO BE FLAGGED OR OTHERWISE CLEARLY MARKED IN THE FIELD. A DOUBLE ROW OF SILT FENCE IS TO BE INSTALLED IN ALL AREAS WHERE A 50-FOOT BUFFER CAN'T BE MAINTAINED BETWEEN THE DISTURBED AREA AND ALL WOS. A 10-FOOT BUFFER SHOULD BE MAINTAINED BETWEEN THE LAST ROW OF SILT FENCE AND ALL WOS.
10. LITTER, CONSTRUCTION DEBRIS, OILS, FUELS, AND BUILDING PRODUCTS WITH SIGNIFICANT POTENTIAL FOR IMPACT (SUCH AS STOCKPILES OF FRESHLY TREATED LUMBER) AND CONSTRUCTION CHEMICALS THAT COULD BE EXPOSED TO STORM WATER MUST BE PREVENTED FROM BECOMING A POLLUTANT SOURCE IN STORM WATER DISCHARGES.
11. A COPY OF THE SWPPP, INSPECTIONS RECORDS, AND RAINFALL DATA MUST BE RETAINED AT THE CONSTRUCTION SITE OR A NEARBY LOCATION EASILY ACCESSIBLE DURING NORMAL BUSINESS HOURS, FROM THE DATE OF COMMENCEMENT OF CONSTRUCTION ACTIVITIES TO THE DATE THAT FINAL STABILIZATION IS REACHED.
12. INITIATE STABILIZATION MEASURES ON ANY EXPOSED STEEP SLOPE (3H:1V OR GREATER) WHERE LAND-DISTURBING ACTIVITIES HAVE PERMANENTLY OR TEMPORARILY CEASED, AND WILL NOT RESUME FOR A PERIOD OF 7 CALENDAR DAYS.
13. MINIMIZE SOIL COMPACTION AND, UNLESS INFEASIBLE, PRESERVE TOPSOIL.
14. MINIMIZE THE DISCHARGE OF POLLUTANTS FROM EQUIPMENT AND VEHICLE WASHING, WHEEL WASH WATER, AND OTHER WASH WATERS. WASH WATERS MUST BE TREATED IN A SEDIMENT BASIN OR ALTERNATIVE CONTROL THAT PROVIDES EQUIVALENT OR BETTER TREATMENT PRIOR TO DISCHARGE;
15. MINIMIZE THE DISCHARGE OF POLLUTANTS FROM DEWATERING OF TRENCHES AND EXCAVATED AREAS. THESE DISCHARGES ARE TO BE ROUTED THROUGH APPROPRIATE BMPS (SEDIMENT BASIN, FILTER BAG, ETC.).
16. THE FOLLOWING DISCHARGES FROM SITES ARE PROHIBITED:
   - WASTEWATER FROM WASHOUT OF CONCRETE, UNLESS MANAGED BY AN APPROPRIATE CONTROL;
   - WASTEWATER FROM WASHOUT AND CLEANOUT OF STUCCO, PAINT, FORM RELEASE OILS, CURING COMPOUNDS AND OTHER CONSTRUCTION MATERIALS;
   - FUELS, OILS, OR OTHER POLLUTANTS USED IN VEHICLE AND EQUIPMENT OPERATION AND MAINTENANCE; AND
   - SOAPS OR SOLVENTS USED IN VEHICLE AND EQUIPMENT WASHING.
17. AFTER CONSTRUCTION ACTIVITIES BEGIN, INSPECTIONS MUST BE CONDUCTED AT A MINIMUM OF AT LEAST ONCE EVERY CALENDAR WEEK AND MUST BE CONDUCTED UNTIL FINAL STABILIZATION IS REACHED ON ALL AREAS OF THE CONSTRUCTION SITE.
18. IF EXISTING BMPS NEED TO BE MODIFIED OR IF ADDITIONAL BMPS ARE NECESSARY TO COMPLY WITH THE REQUIREMENTS OF THIS PERMIT AND/OR SC'S WATER QUALITY STANDARDS, IMPLEMENTATION MUST BE COMPLETED BEFORE THE NEXT STORM EVENT WHENEVER PRACTICABLE. IF IMPLEMENTATION BEFORE THE NEXT STORM EVENT IS IMPRACTICABLE, THE SITUATION MUST BE DOCUMENTED IN THE SWPPP AND ALTERNATIVE BMPS MUST BE IMPLEMENTED AS SOON AS REASONABLY POSSIBLE.
19. A PRE-CONSTRUCTION CONFERENCE MUST BE HELD FOR EACH CONSTRUCTION SITE WITH AN APPROVED ON-SITE SWPPP PRIOR TO THE IMPLEMENTATION OF CONSTRUCTION ACTIVITIES. FOR NON-LINEAR PROJECTS THAT DISTURB 10 ACRES OR MORE THIS CONFERENCE MUST BE HELD ON-SITE UNLESS THE DEPARTMENT HAS APPROVED OTHERWISE.
20. THE PROJECT'S DISTURBED AREA IS APPROXIMATELY 50,000 SF / 1.15 ACRES.

CONSTRUCTION SEQUENCE

1. CONDUCT PRE-CONSTRUCTION CONFERENCE WITH APPROVED ON-SITE SWPPP. PERFORM ALL NPDES REQUIRED RECORD KEEPING THROUGHOUT THE DURATION OF THE PROJECT.

2. CONTACT OWNER AT LEAST 7 DAYS PRIOR TO COMMENCING WORK ON THE SITE.

3. INSTALL TRAFFIC CONTROL DEVICES AND CONSTRUCT TEMPORARY CONSTRUCTION ENTRANCES AT ALL LOCATIONS WHERE CONSTRUCTION TRAFFIC WILL EXIT ONTO PAVED SURFACES. MAINTAIN ENTRANCE AND PROMPTLY REMOVE ANY SOIL TRACKING ON ROADWAY THROUGHOUT PROJECT.

4. INSTALL EROSION CONTROL DEVICES.

5. COMMENCE DEMOLITION.

6. INSTALL PROPOSED STORM DRAINAGE SYSTEM.

7. REPAIR DRIVEWAYS, MAILBOXES, PAVEMENTS, CURBS, ETC.

8. CLEAN PROPOSED STORM SYSTEM.

9. PROVIDE PERMANENT SEEDING AND RESTORE ANY PRIVATE PROPERTY GROUNDS AS REQUIRED.

10. SCHEDULE FINAL INSPECTION WITH OWNER AND ENGINEER.

11. REMOVE ANY REMAINING EROSION CONTROL DEVICES ONLY AFTER SITE HAS FULLY STABILIZED.

SOUTH CAROLINA PROFESSIONAL ENGINEER 10/27/16 No. 26505 CARLA MUSCARELLA
SEAL

SOUTH CAROLINA WOOLPERT, INC. No. C02990 CERTIFICATE OF AUTHORIZATION
COA

No.	DATE	REVISION

PROJECT No: 74840
DATE 04/04/16
DES. WLPRT
DR. VT
CKD. PAS

2000 Center Point Road
Suite 2200
Columbia, SC 29210
803.731.0261
FAX: 803.731.0132
WOOLPERT

MERRIFIELD STORM WATER IMPROVEMENTS
GREENVILLE COUNTY
SOUTH CAROLINA

GENERAL NOTES

SHEET NO.
C001

Z:\3M\Projects\SC_Greenville_CO\074840_Rocky_Creek_Watershed\Merrifield\Data\CAD\Plan_Sheets\02_Merrifield_C001_Notes.dwg, C001, 8/11/2016 3:57:33 PM, 1:1

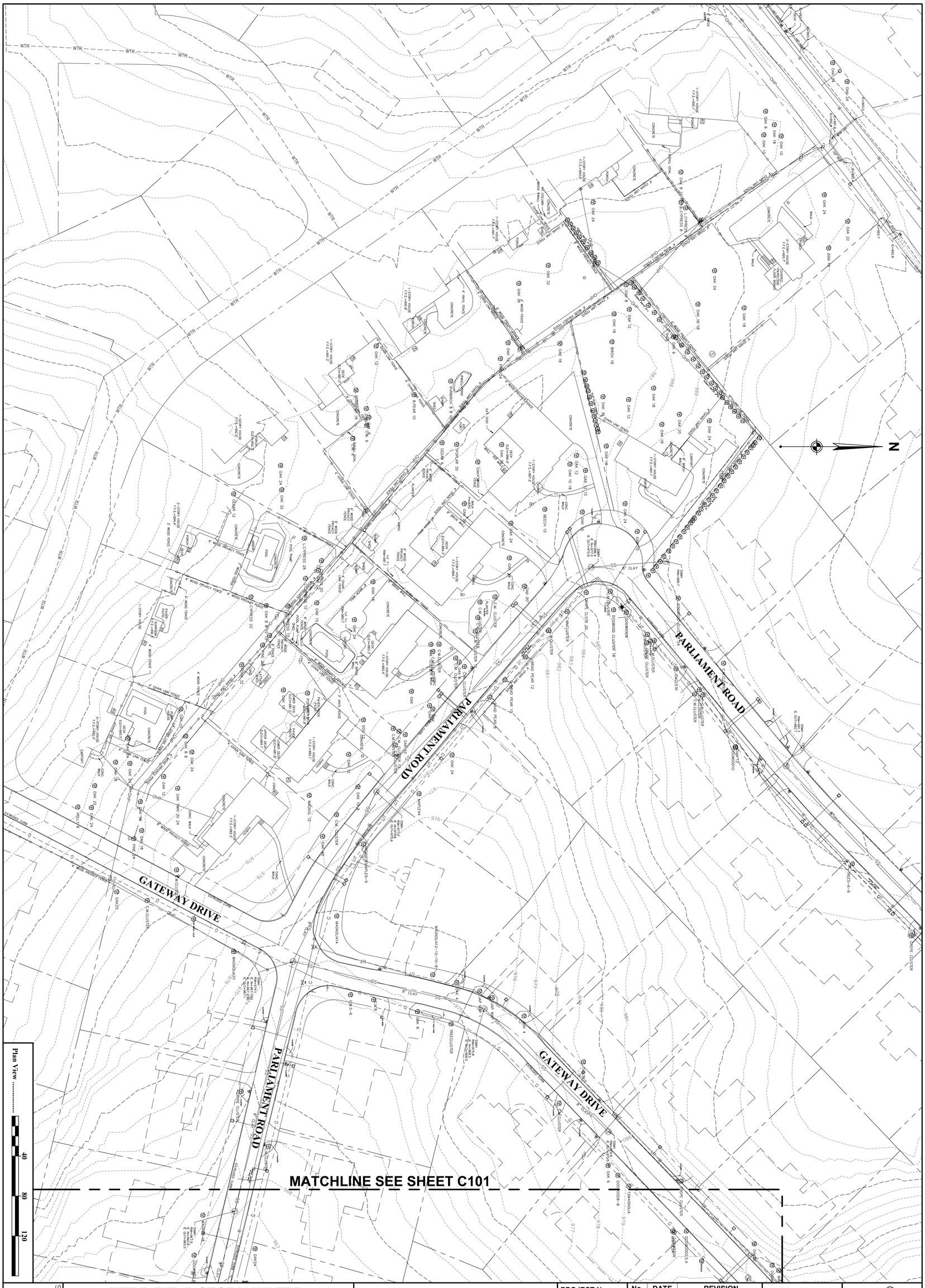

SHEET NO.
C100

MERRIFIELD STORM WATER IMPROVEMENTS

GREENVILLE COUNTY

SOUTH CAROLINA

EXISTING CONDITIONS

WOOLPERT
2000 Center Point Road
Suite 2200
Columbia, SC 29210
803.731.0261
FAX: 803.731.0132

PROJECT No:	74840
DATE	04/04/16
DES.	WLPRT
DR.	VT
CKD.	PAS

No.	DATE	REVISION

COA

SEAL

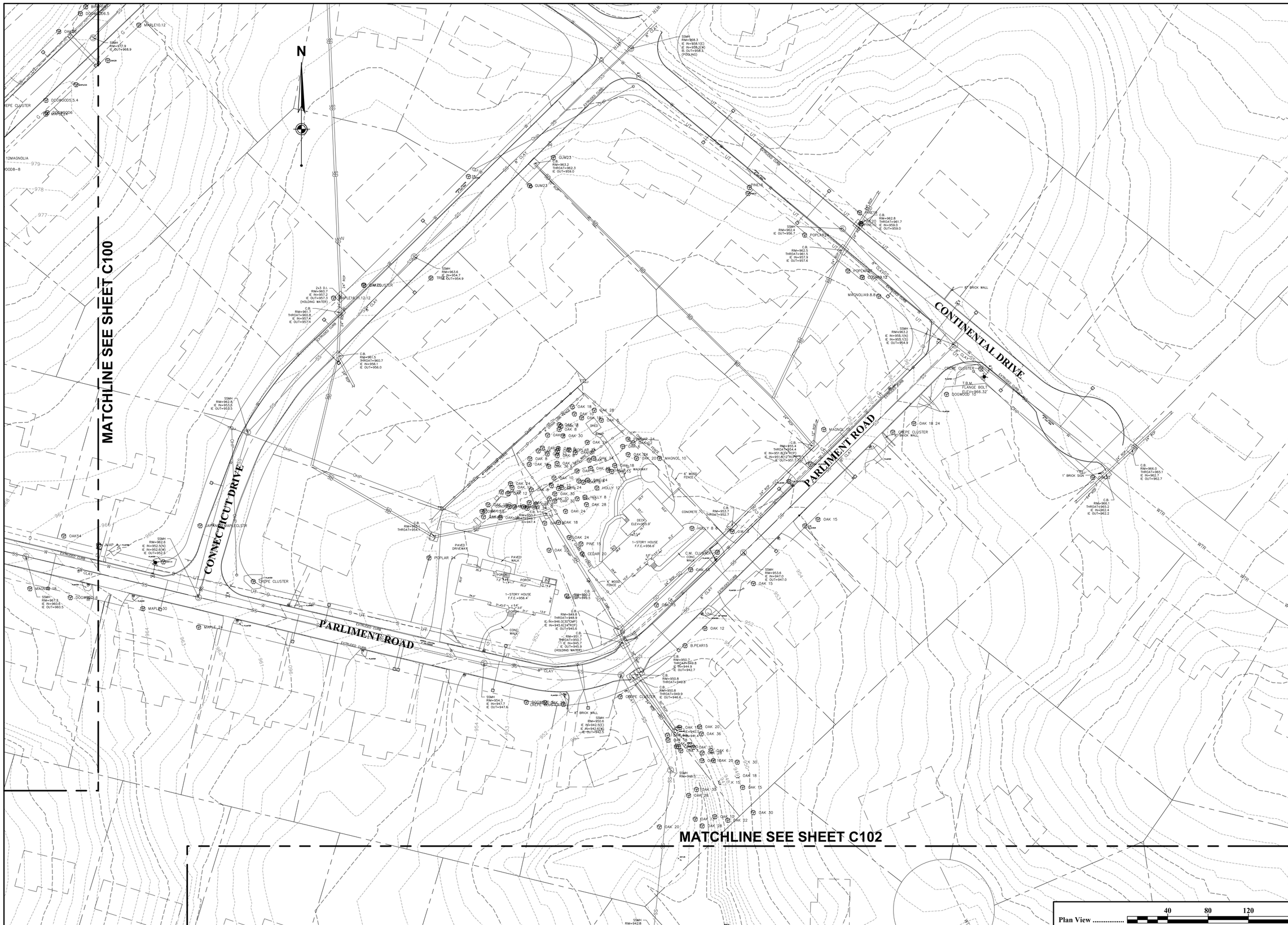

SOUTH CAROLINA
PROFESSIONAL ENGINEER
10/17/16
No. 26505
MARIA MUSCARELLA
SEAL

SOUTH CAROLINA
WOOLPERT, INC.
No. C02990
CERTIFICATE OF AUTHORIZATION
COA

No.	DATE	REVISION

PROJECT No: 74840
DATE 04/04/16
DES. WLPRT
DR. VT
CKD. PAS

WOOLPERT
2000 Center Point Road
Suite 2200
Columbia, SC 29210
803.731.0261
FAX: 803.731.0132

MERRIFIELD STORM WATER IMPROVEMENTS

GREENVILLE COUNTY
SOUTH CAROLINA

EXISTING CONDITIONS

SHEET NO.
C101

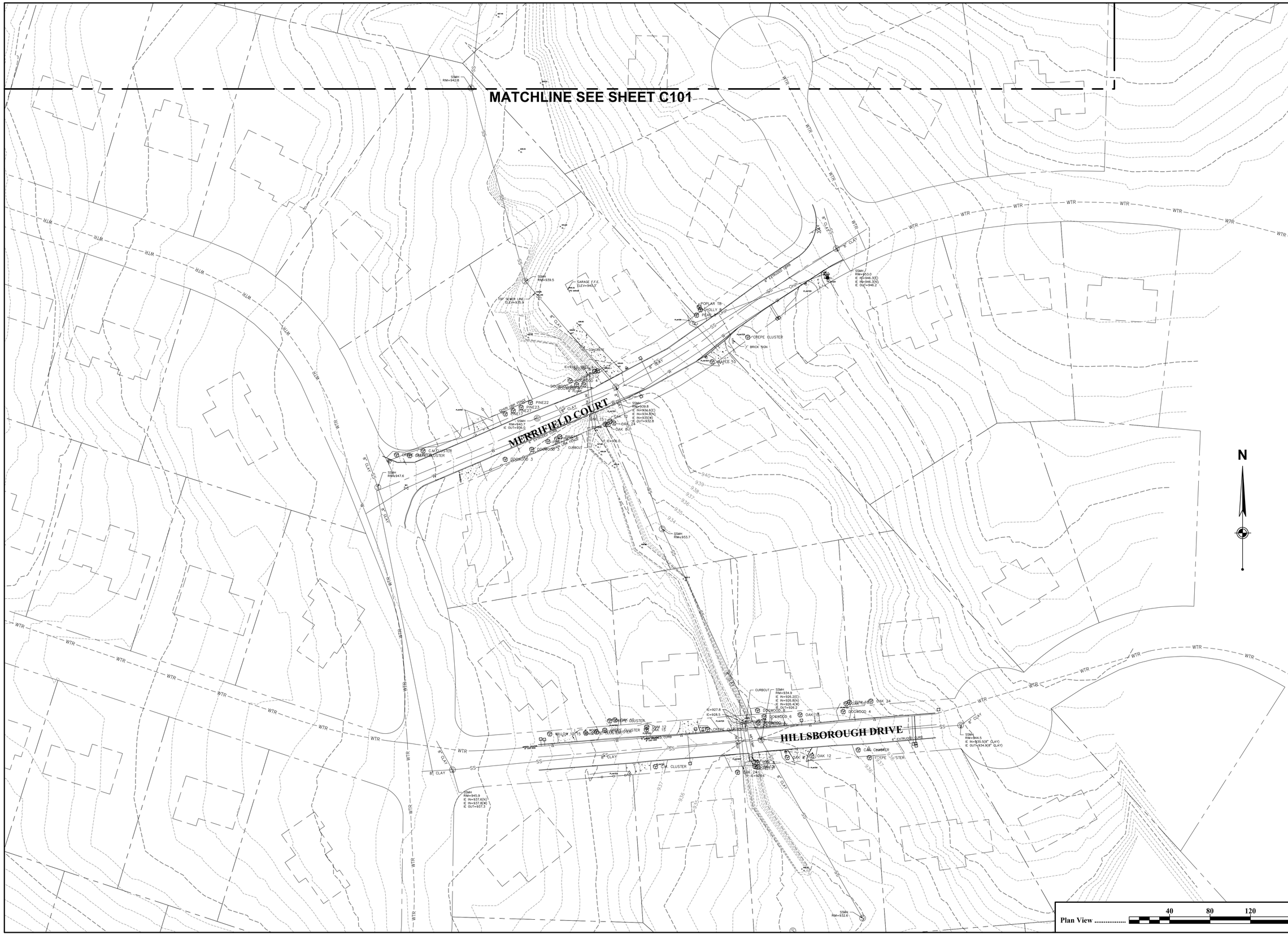

SOUTH CAROLINA
LICENSE PROFESSIONAL ENGINEER
10/17/16
No. 26505
MARLA MUSCARELLA
SEAL

SOUTH CAROLINA
WOOLPERT, INC.
No. C02990
CERTIFICATE OF AUTHORIZATION
COA

No.	DATE	REVISION

PROJECT No: 74840
DATE 04/04/16
DES. WLPRT
DR. VT
CKD. PAS

WOOLPERT
2000 Center Point Road
Suite 2200
Columbia, SC 29210
803.731.0261
FAX: 803.731.0132

MERRIFIELD STORM WATER IMPROVEMENTS

GREENVILLE COUNTY
SOUTH CAROLINA

EXISTING CONDITIONS

SHEET NO.
C102

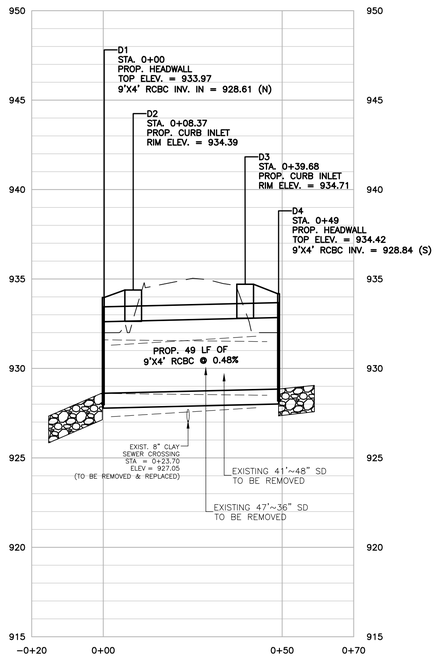

LINE-D

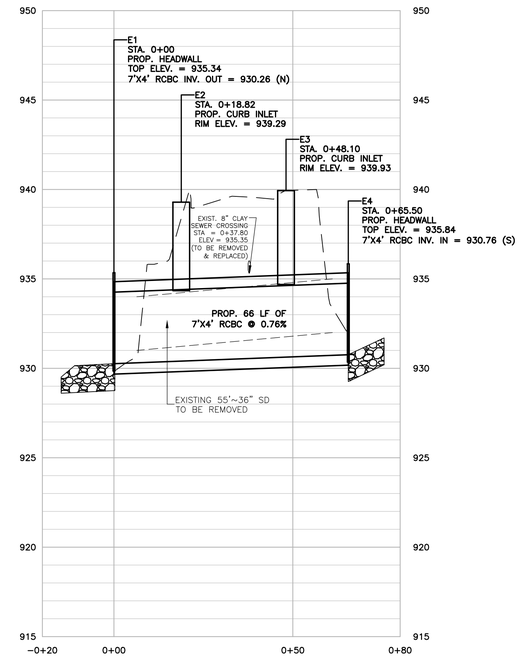

LINE-E

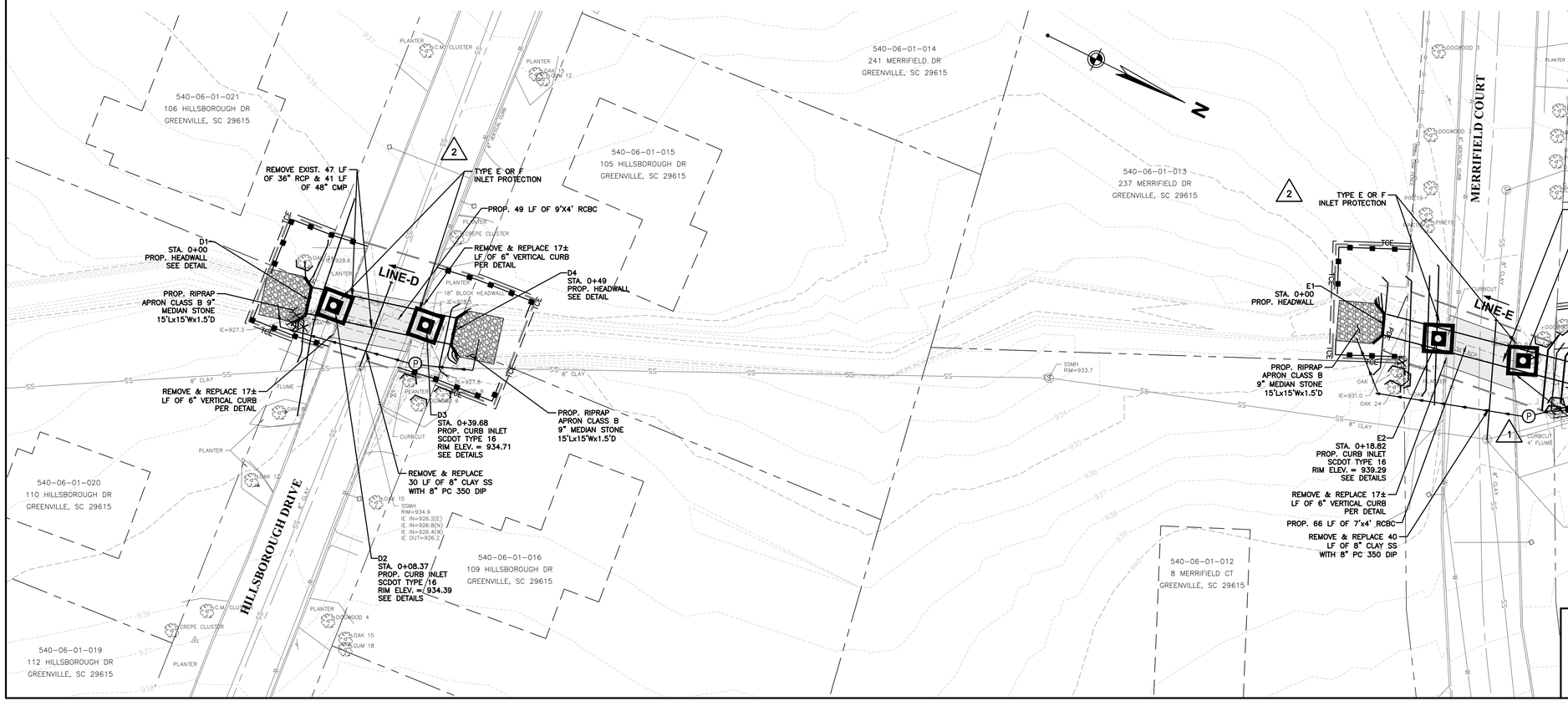

LEGEND

- SILT FENCE
- TREE PROTECTION
- LIMITS OF DISTURBANCE
- PAVEMENT PATCHING PER DETAIL
- PDE — PERMANENT DRAINAGE EASEMENT
- TCE — TEMPORARY DRAINAGE EASEMENT
- INLET PROTECTION
- PUMP AROUND

Plan View 20 40 60

Horz. Profile 20 40 60

Vert. Profile 4 8 12

SOUTH CAROLINA PROFESSIONAL ENGINEER 10/27/16 No. 26505 CHARLES MICHAEL MUSCARELLA

SEAL

SOUTH CAROLINA WOOLPERT, INC. No. C02990 CERTIFICATE OF AUTHORIZATION

COA

No.	DATE	REVISION
1	6/27/16	REVISIONS PER GREENVILLE COUNTY
2	9/26/16	PER SC DHEC

PROJECT No: 74840
DATE 04/04/16
DES. WLPRT
DR. VT
CKD. PAS

2000 Center Point Road
Suite 2200
Columbia, SC 29210
803.731.0261
FAX: 803.731.0132

WOOLPERT

MERRIFIELD STORM WATER IMPROVEMENTS

GREENVILLE COUNTY
SOUTH CAROLINA

PLAN AND PROFILE

SHEET NO.

C200

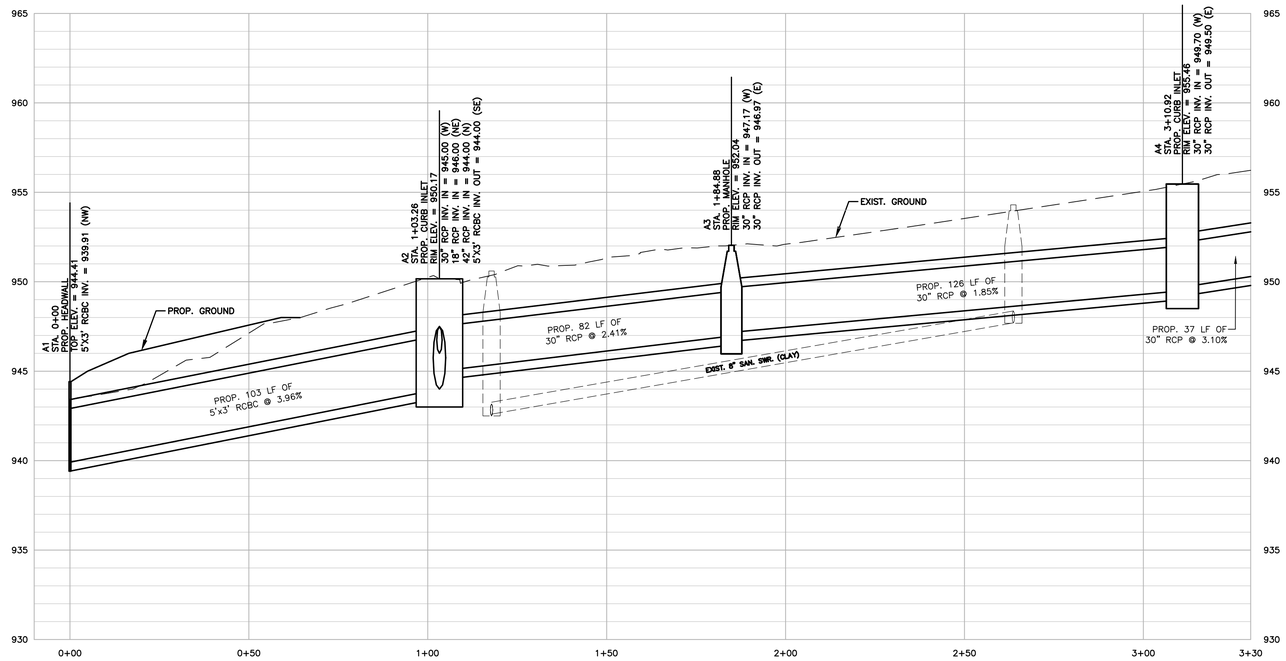

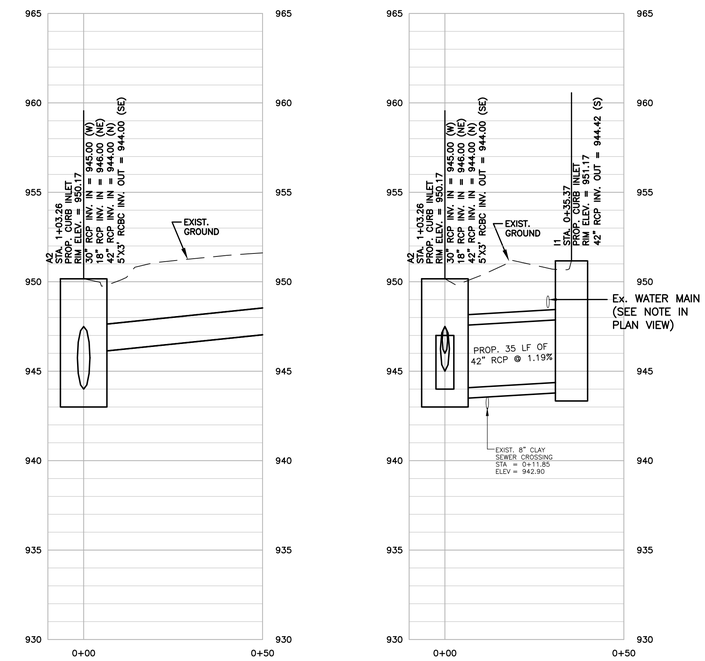

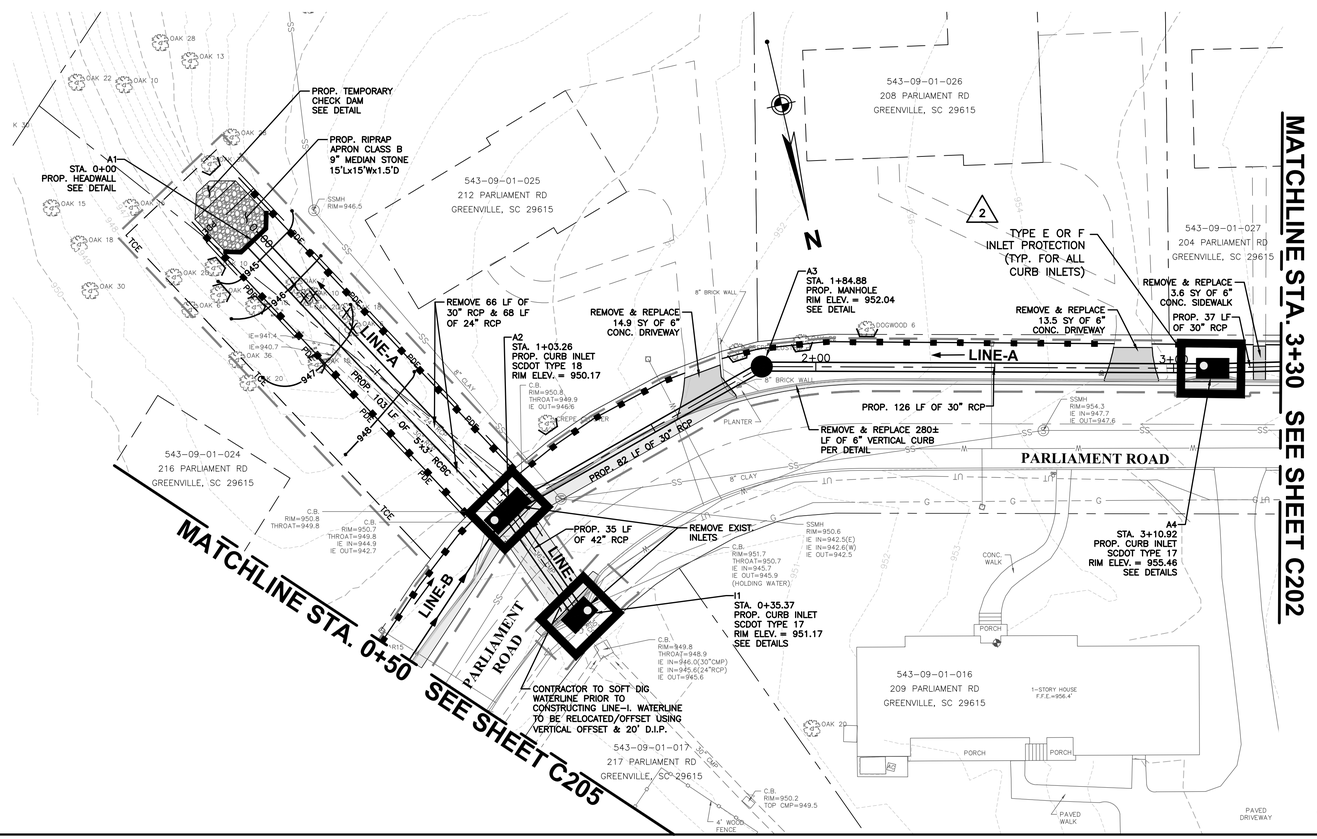

LEGEND

- SILT FENCE
- TREE PROTECTION
- LIMITS OF DISTURBANCE
- PAVEMENT PATCHING PER DETAIL
- PDE — PERMANENT DRAINAGE EASEMENT
- TCE — TEMPORARY DRAINAGE EASEMENT
- INLET PROTECTION

Plan View 20 40 60
Horz. Profile 20 40 60
Vert. Profile 4 8 12

SOUTH CAROLINA PROFESSIONAL ENGINEER 10/27/16 No. 26505 MARIA MICCARELLI

SOUTH CAROLINA WOOLPERT, INC. No. C02990 CERTIFICATE OF AUTHORIZATION

No.	DATE	REVISION
2	9/26/16	PER SC DHEC

PROJECT No: 74840
DATE 04/04/16
DES. WLPRT
DR. VT
CKD. PAS

WOOLPERT
2000 Center Point Road
Suite 2200
Columbia, SC 29210
803.731.0261
FAX: 803.731.0132

MERRIFIELD STORM WATER IMPROVEMENTS

GREENVILLE COUNTY
SOUTH CAROLINA

PLAN AND PROFILE

SHEET NO.
C201

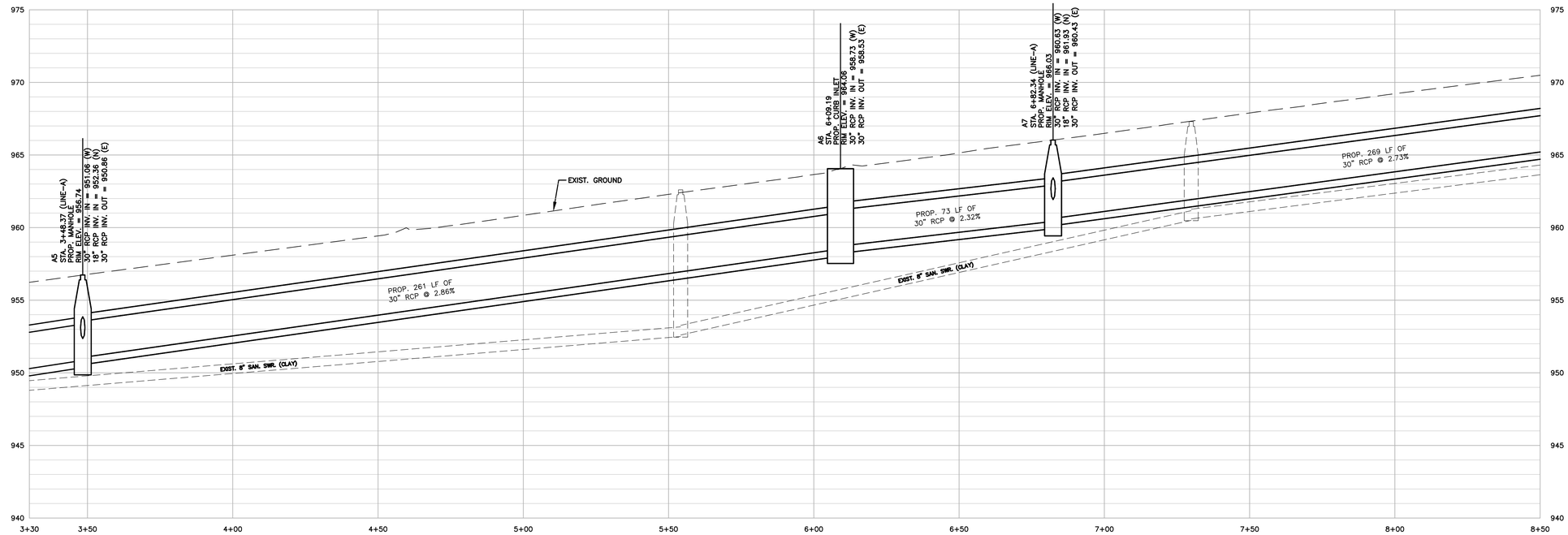

LINE-A

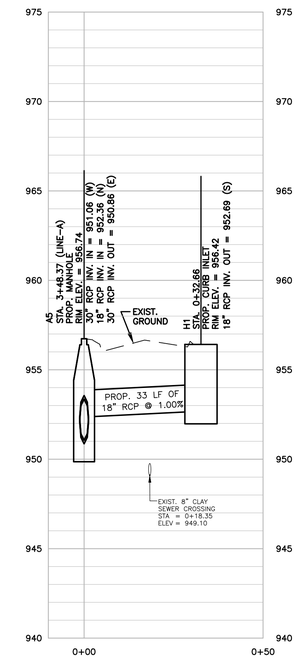

LINE-H

LEGEND

- SILT FENCE
- TREE PROTECTION
- LIMITS OF DISTURBANCE
- PAVEMENT PATCHING PER DETAIL
- PDE — PERMANENT DRAINAGE EASEMENT
- TCE — TEMPORARY DRAINAGE EASEMENT
- INLET PROTECTION

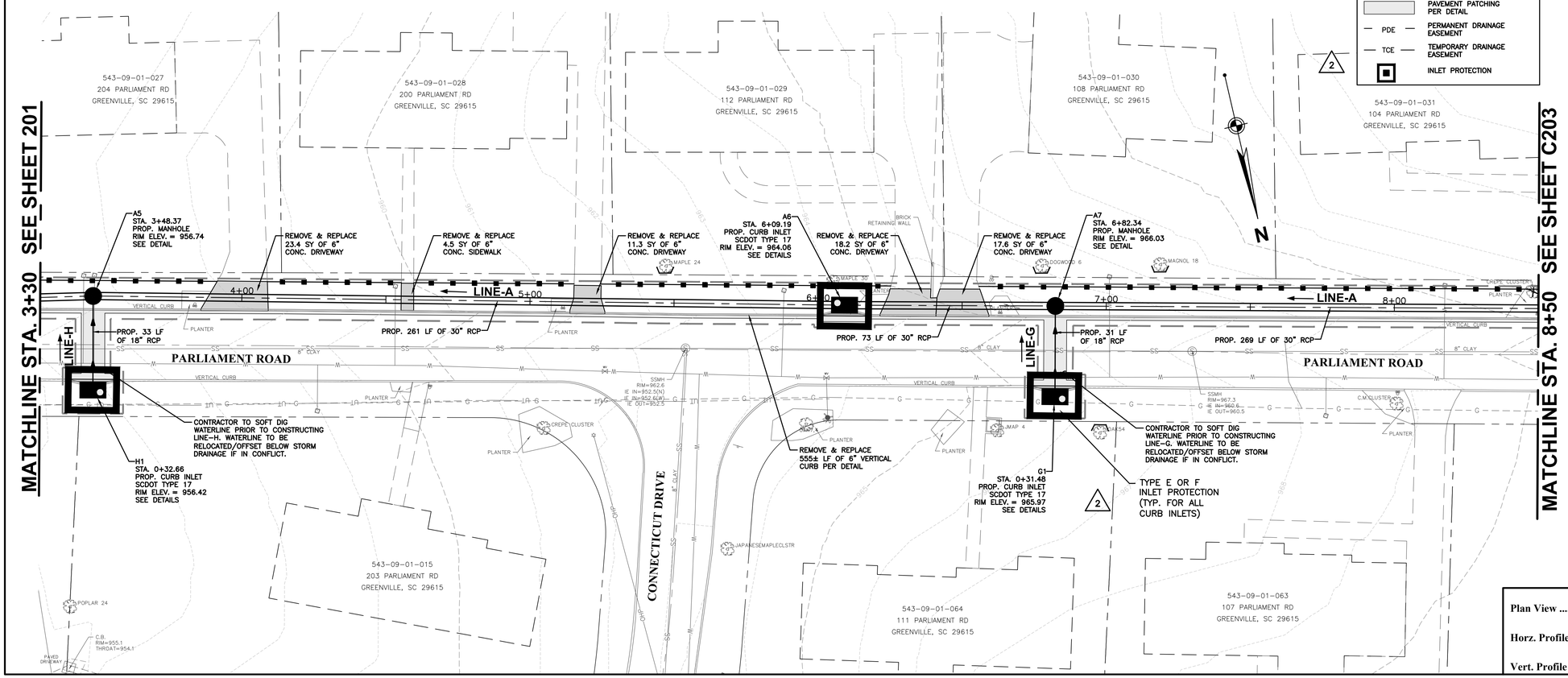

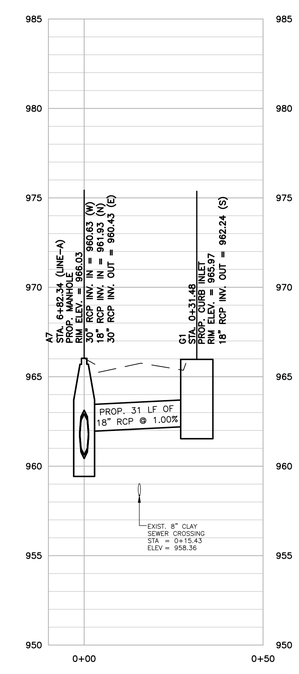

LINE-G

Plan View	20	40	60
Horz. Profile	20	40	60
Vert. Profile	4	8	12

SOUTH CAROLINA PROFESSIONAL ENGINEER
No. 26505
10/27/16
MICHAEL MICCARELLI

SOUTH CAROLINA
WOOLPERT, INC.
No. C02990
CERTIFICATE OF AUTHORIZATION

No.	DATE	REVISION
1	6/27/16	REVISIONS PER GREENVILLE COUNTY
2	9/26/16	PER SC DHEC

PROJECT No: 74840
DATE 04/04/16
DES. WLPRT
DR. VT
CKD. PAS

2000 Center Point Road
Suite 2200
Columbia, SC 29210
803.731.0261
FAX: 803.731.0132
WOOLPERT

MERRIFIELD STORM WATER IMPROVEMENTS

GREENVILLE COUNTY
SOUTH CAROLINA

PLAN AND PROFILE

SHEET NO.
C202

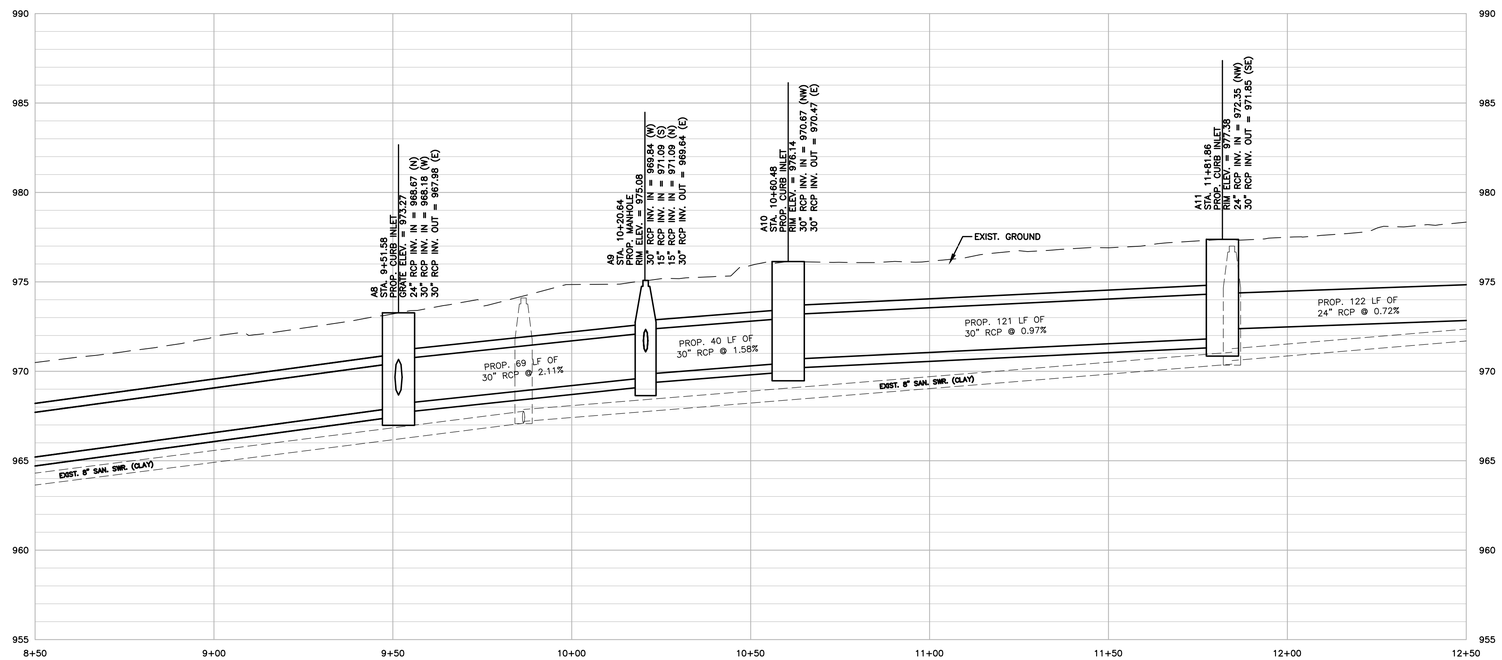

LINE-A

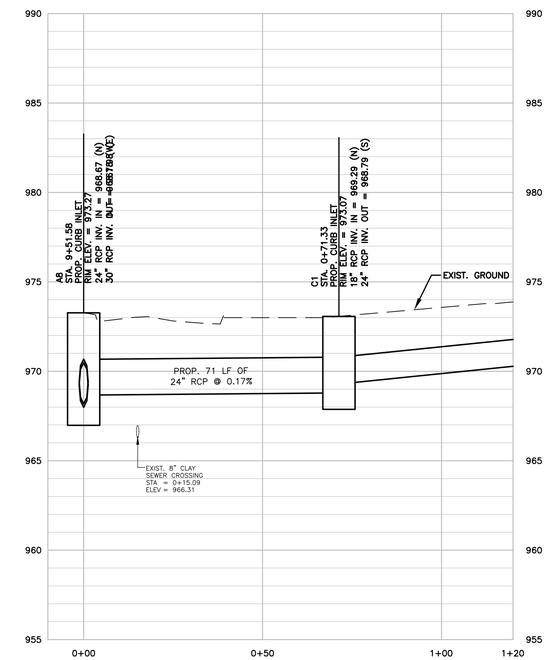

LINE-C

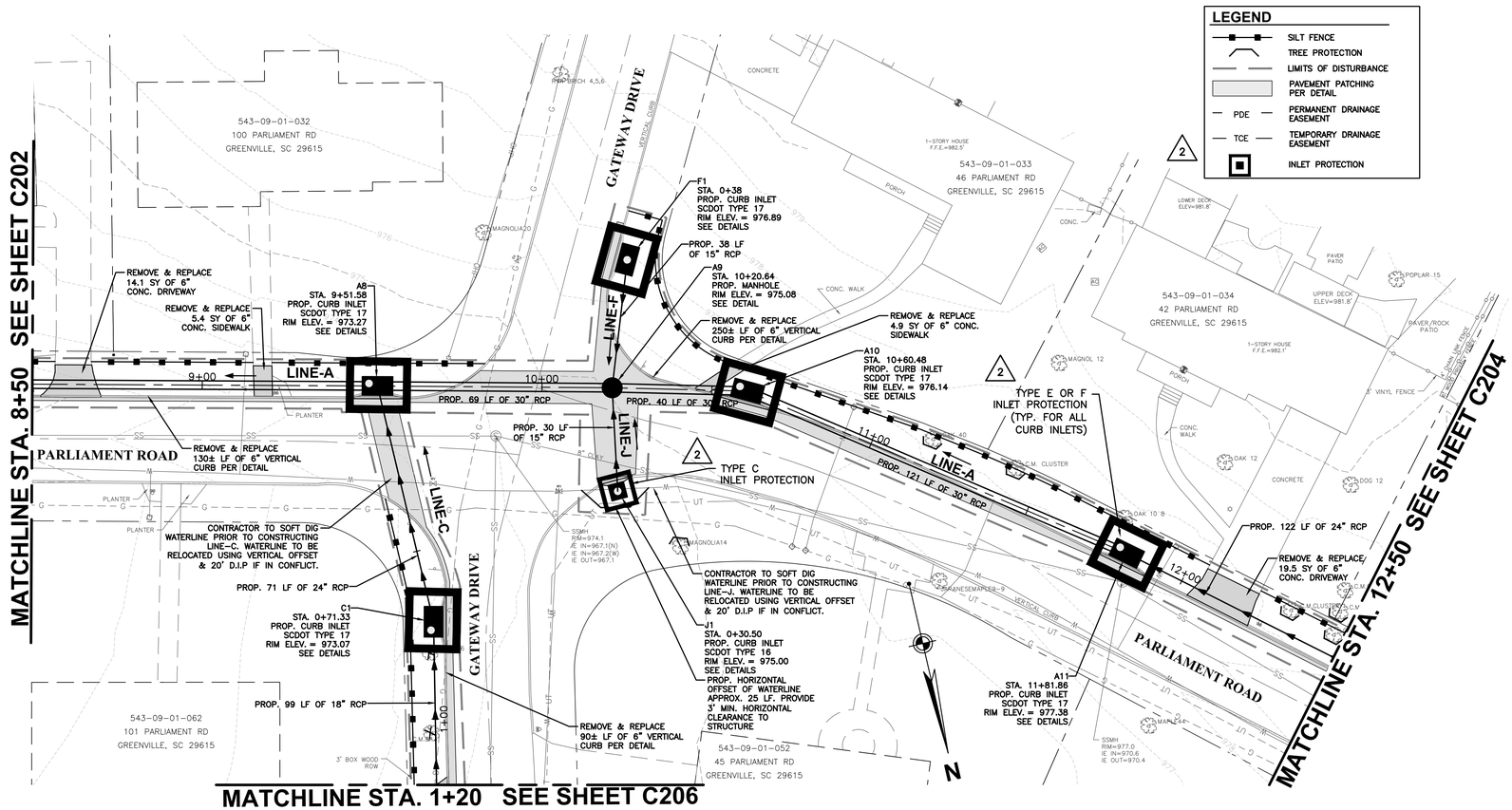

LEGEND

- SILT FENCE
- TREE PROTECTION
- LIMITS OF DISTURBANCE
- PAVEMENT PATCHING PER DETAIL
- PDE — PERMANENT DRAINAGE EASEMENT
- TCE — TEMPORARY DRAINAGE EASEMENT
- INLET PROTECTION

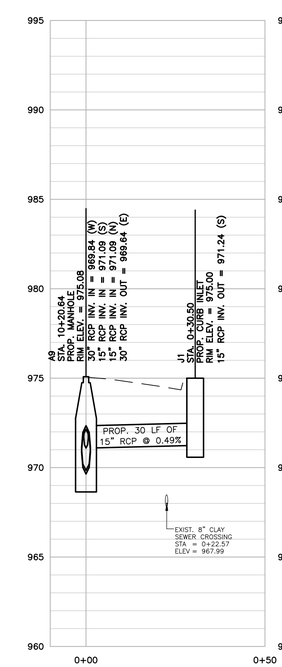

LINE-J

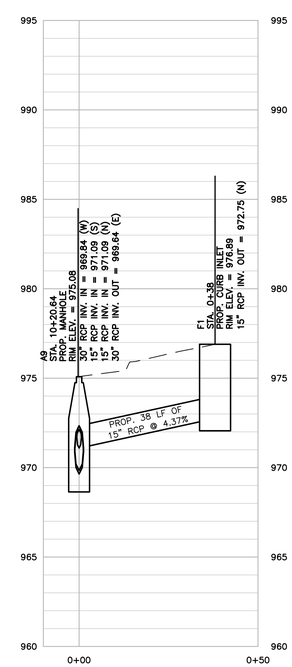

LINE-F

WOOLPERT
2000 Center Point Road
Suite 2200
Columbia, SC 29210
803.731.0261
FAX: 803.731.0132

No.	DATE	REVISION
2	9/26/16	PER SC DHEC

PROJECT No: 74840
DATE 04/04/16
DES. WLPRT
DR. VT
CKD. PAS

MERRIFIELD STORM WATER IMPROVEMENTS

GREENVILLE COUNTY
SOUTH CAROLINA

PLAN AND PROFILE

Plan View 20 40 60
Horz. Profile 20 40 60
Vert. Profile 4 8 12

SHEET NO.
C203

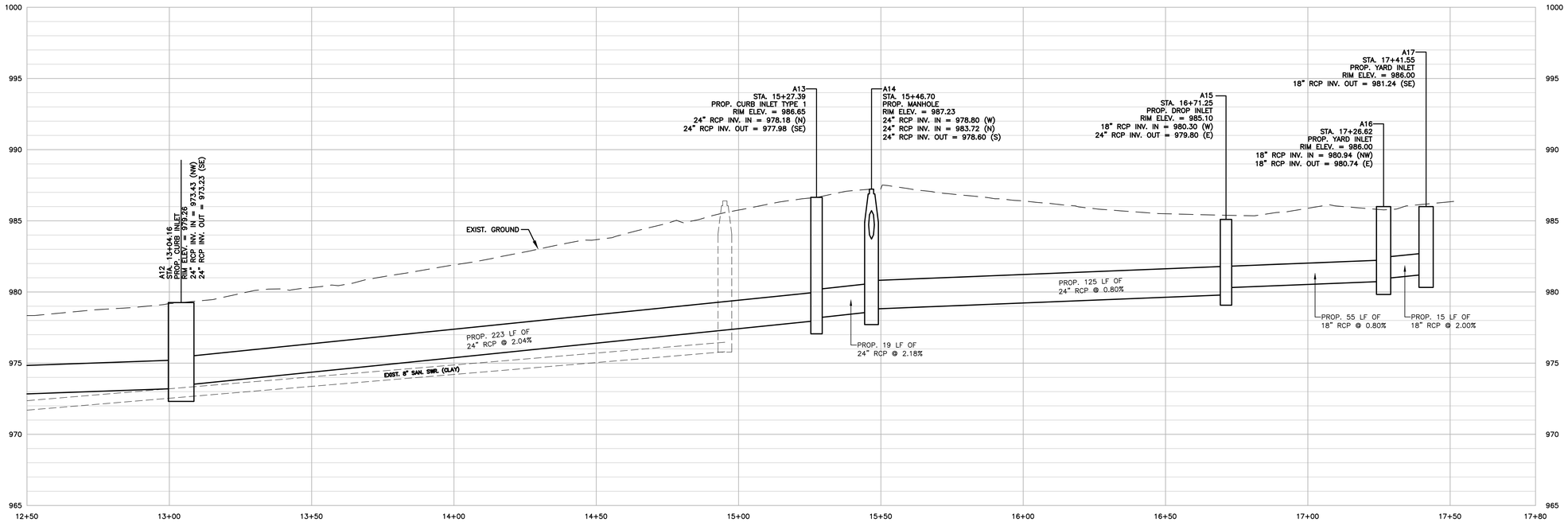

LINE-A

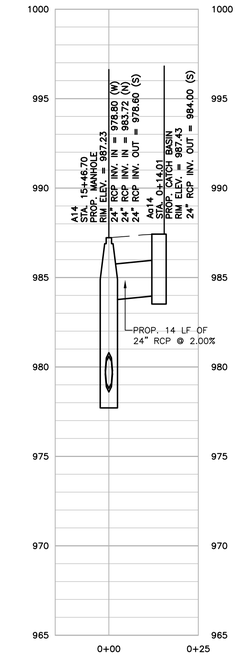

LINE-Aa

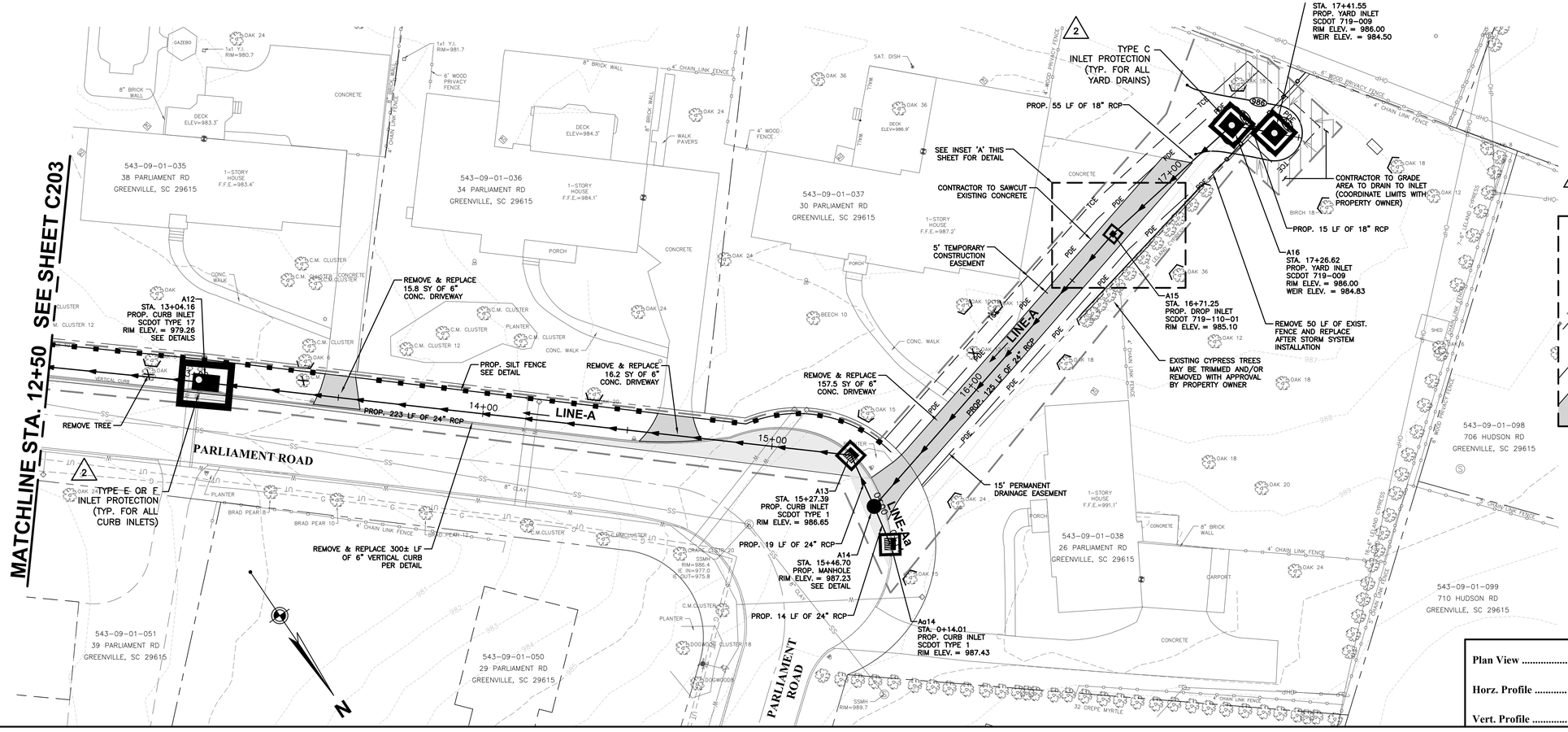

LEGEND

- SILT FENCE
- TREE PROTECTION
- LIMITS OF DISTURBANCE
- PAVEMENT PATCHING PER DETAIL
- PDE — PERMANENT DRAINAGE EASEMENT
- TCE — TEMPORARY DRAINAGE EASEMENT
- X — TREE TO BE REMOVED
- INLET PROTECTION

INSET 'A'

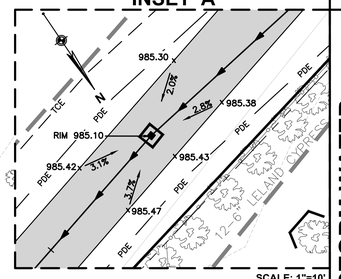

Plan View	20	40	60
Horz. Profile	20	40	60
Vert. Profile	4	8	12

SOUTH CAROLINA PROFESSIONAL ENGINEER 10/27/16 No. 26505 MARIA MARGARETA MUÑOZ-MUÑOZ

SEAL

SOUTH CAROLINA WOOLPERT, INC. No. C02990 CERTIFICATE OF AUTHORIZATION

COA

No.	DATE	REVISION
1	6/1/16	PER COUNTY REVIEW
2	9/26/16	PER SC DHEC

PROJECT No: 74840
DATE 04/04/16
DES. WLPRT
DR. VT
CKD. PAS

2000 Center Point Road
Suite 2200
Columbia, SC 29210
803.731.0261
FAX: 803.731.0132
WOOLPERT

MERRIFIELD STORM WATER IMPROVEMENTS

GREENVILLE COUNTY
SOUTH CAROLINA

PLAN AND PROFILE

SHEET NO.
C204

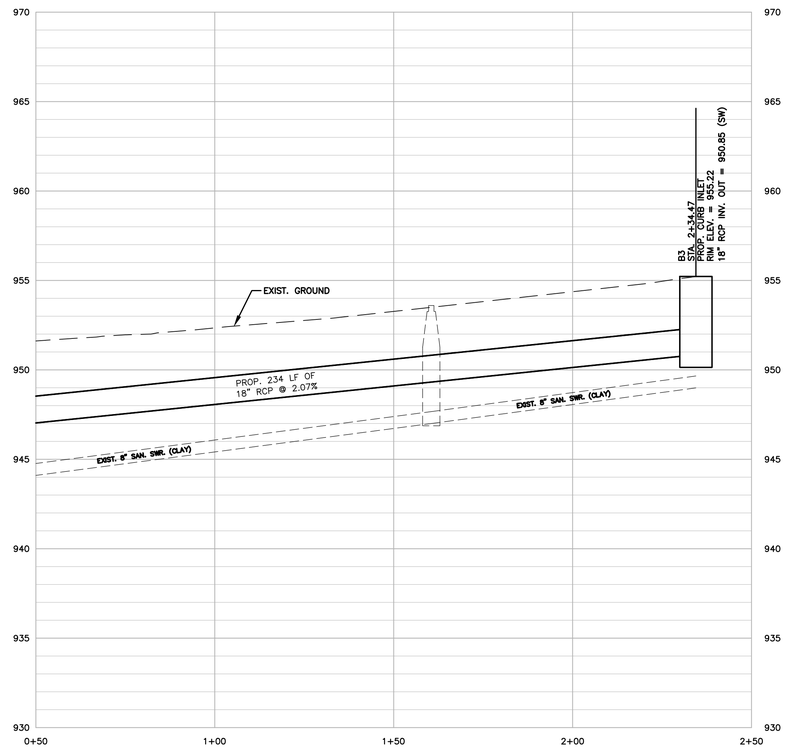

LINE-B

LEGEND

- SILT FENCE
- TREE PROTECTION
- LIMITS OF DISTURBANCE
- PAVEMENT PATCHING PER DETAIL
- PDE — PERMANENT DRAINAGE EASEMENT
- TCE — TEMPORARY DRAINAGE EASEMENT
- INLET PROTECTION

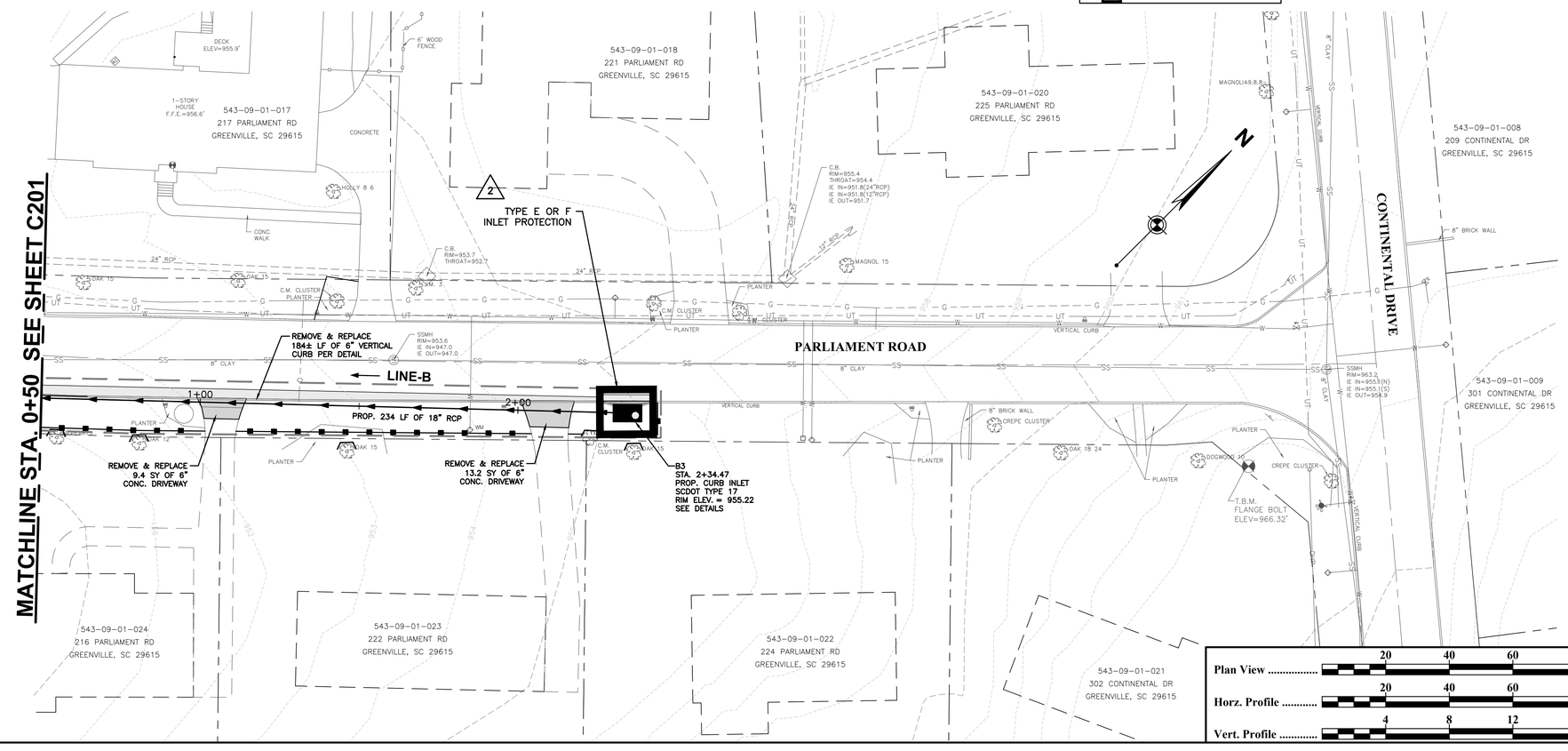

Plan View 20 40 60

Horz. Profile 20 40 60

Vert. Profile 4 8 12

SOUTH CAROLINA
LICENSED PROFESSIONAL ENGINEER
10/17/16
No. 26505
MARLA MUSCARELLI
SEAL

SOUTH CAROLINA
WOOLPERT, INC.
No. C02990
CERTIFICATE OF AUTHORIZATION
COA

No.	DATE	REVISION
2	9/26/16	PER SC DHEC

PROJECT No: 74840
DATE 04/04/16
DES. WLPRT
DR. VT
CKD. PAS

WOOLPERT
2000 Center Point Road
Suite 2200
Columbia, SC 29210
803.731.0261
FAX: 803.731.0132

MERRIFIELD STORM WATER IMPROVEMENTS

GREENVILLE COUNTY
SOUTH CAROLINA

PLAN AND PROFILE

SHEET NO.
C205

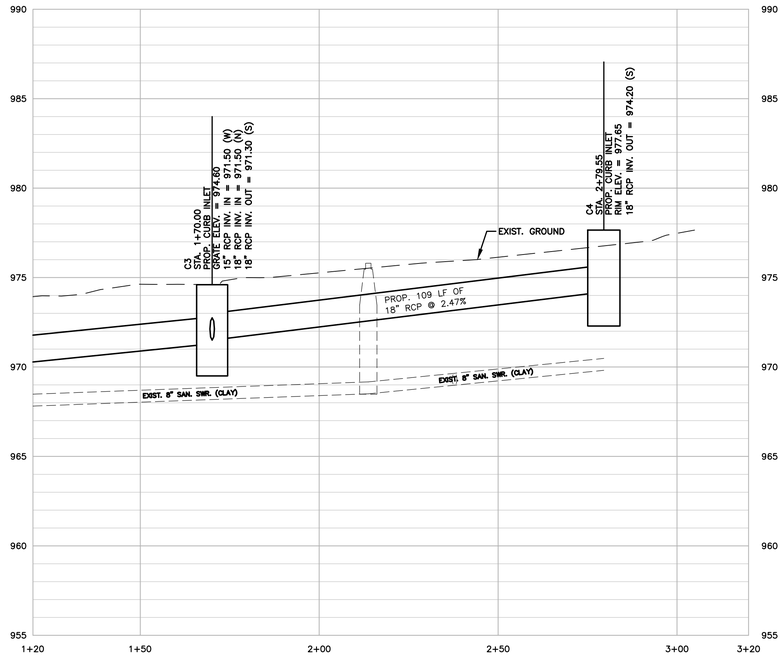

LINE-C

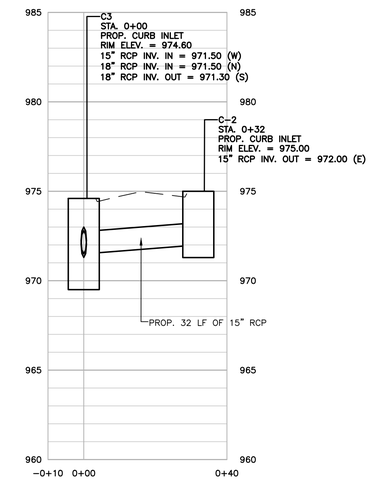

LINE-C

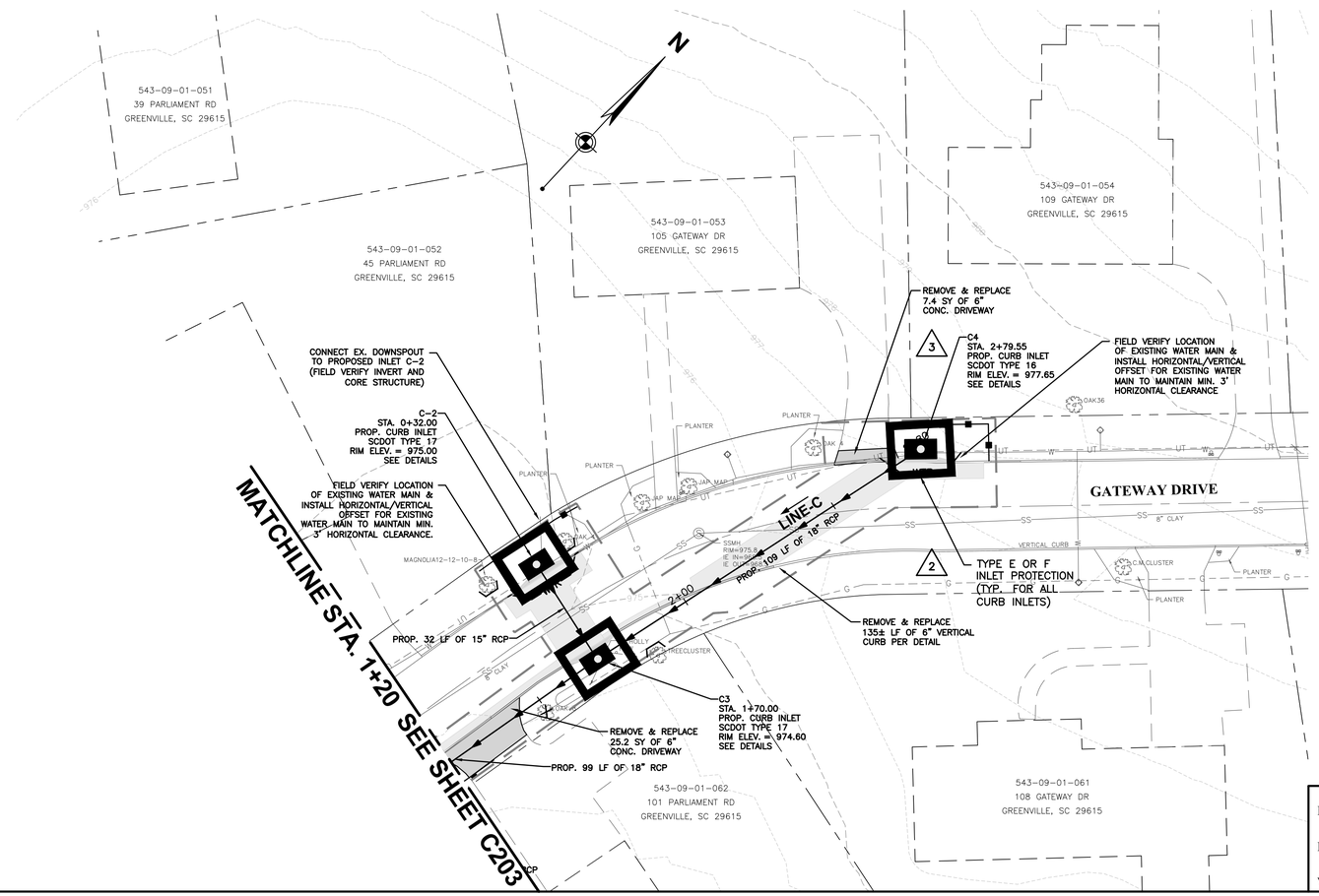

LEGEND

- SILT FENCE
- TREE PROTECTION
- LIMITS OF DISTURBANCE
- PAVEMENT PATCHING PER DETAIL
- PDE — PERMANENT DRAINAGE EASEMENT
- TCE — TEMPORARY DRAINAGE EASEMENT
- INLET PROTECTION

Plan View	20 40 60
Horz. Profile	20 40 60
Vert. Profile	4 8 12

SOUTH CAROLINA PROFESSIONAL ENGINEER 10/27/16 No. 26505 MARIA MUSCARELLA

SEAL

SOUTH CAROLINA WOOLPERT, INC. No. CD2990 CERTIFICATE OF AUTHORIZATION

COA

No.	DATE	REVISION
1	6/27/16	REVISIONS PER GREENVILLE COUNTY.
2	9/26/16	PER SC DHEC
3	10/17/16	PER GREENVILLE COUNTY

PROJECT No: 74840
DATE 04/04/16
DES. WLPRT
DR. VT
CKD. PAS

WOOLPERT
2000 Center Point Road
Suite 2200
Columbia, SC 29210
803.731.0261
FAX: 803.731.0132

MERRIFIELD STORM WATER IMPROVEMENTS

GREENVILLE COUNTY
SOUTH CAROLINA

PLAN AND PROFILE

SHEET NO.
C206

Temporary Stabilization

Temporary Stabilization is defined as a condition where exposed soils or disturbed areas are provided a temporary vegetative and/or non–vegetative protective cover to prevent erosion and sediment loss. Temporary stabilization may include temporary seeding, geotextiles, mulches, and other techniques to reduce or eliminate erosion until either final stabilization can be achieved or until further construction activities take place to re–disturb this area.

Initiating Temporary Stabilization

Initiate temporary stabilization by mulch or temporary stabilization by seeding within 7 calendar days where land disturbing activities have temporarily ceased on the Project and will not resume for a period exceeding 14 calendar days. Where land disturbing activities on a portion of the Project are temporarily ceased, and the land disturbing activities are resumed within 14 days, temporary stabilization measures are not required to be initiated on that portion of the Project.

Temporary stabilization by seeding is required if the Project will not be worked for a period longer than 60 days.

Initiate temporary stabilization measures as soon as practicable for areas where initiating temporary stabilization measures within 7 days is infeasible (e.g., where snow cover, frozen ground, or drought conditions preclude stabilization).

Temporary Stabilization

Acceptance of Temporary Stabilization

Before acceptance of temporary stabilization by the regulatory agency and the Design Engineer or Landscape Architect, temporary stabilization is required that is sufficient to control erosion for a given area and length of time before the next phase of construction or the establishment of permanent seeding is to commence. A satisfactory stand of temporary stabilization meeting the requirements of this Specification is required regardless of the time of the year the work is performed.

Temporary Cover by Mulch

Use temporary cover by mulch where it is not feasible or practicable to bring an area to final slope and grade. Finish the surface so that permanent seeding can be performed without subsequent disturbance by additional grading.

Temporary Cover by Seeding

Following the preparation of the seedbed, sow seed per the seeding Tables and apply an appropriate Mulch prior to a rainfall event that compacts the seedbed. The CONTRACTOR may add granular lime and fertilizer as necessary to enhance growth.

Final Stabilization

Final Stabilization is defined that all land–disturbing activities at the construction site have been completed and that on all areas not covered by permanent structures, either

(1) A uniform (e.g., evenly distributed, without large bare areas) permanent vegetative cover with a density of 70 percent has been established, or

(2) Equivalent permanent stabilization measures (such as the use of landscaping mulch, riprap, pavement, and gravel) have been implemented to provide effective cover for exposed portions of the construction site not stabilized with permanent vegetation.

Final stabilization by vegetation must be achieved with permanent perennial vegetation prior to issuing the Notice of Termination (NOT).

Permanent Seeding

Initiate permanent seeding within 7 calendar days where land disturbing activities have permanently ceased on the Project. Where land disturbing activities are resumed within 14 days, stabilization measures are not required to be initiated on that portion of the Project. Initiate permanent seeding measures as soon as practicable for areas where initiating permanent seeding measures within 7 days is infeasible (e.g., where snow cover, frozen ground, or drought conditions preclude stabilization).

When performing permanent seeding for permanent detention ponds, ensure that the detention pond is cleaned of any deposited sediment and graded to the required permanent detention basin configuration. Ensure the seedbed for the permanent seeding is established in accordance with this Specification.

Acceptance of Permanent Seeding

Before acceptance, a uniform perennial vegetative cover with a density of 70% of each square yard of the seeded area is required. A well developed root system must be established to sufficiently survive dry periods and winter weather and be capable of reestablishment in the spring.

Permanent Seeding Installation

Following the preparation of the seedbed, perform permanent seeding per the seeding Tables and apply an appropriate Mulch within 5 working days and/or prior to a rainfall event that compacts the prepared seedbed. If a rain event occurs that compacts or erodes the seedbed prior to performing permanent seeding, the seedbed must be re–prepared prior to conducting permanent seeding. Add fertilizer and lime as required by a soil test.

Sod

Initiate Sod applications within 7 calendar days where land disturbing activities have permanently ceased on the Project. Initiate Sod applications measures as soon as practicable for areas where initiating Sod applications within 7 days is infeasible (e.g., where snow cover, frozen ground, or drought conditions preclude stabilization). Use Sod on slopes less than 2H:1V.

Acceptance of Sod

Acceptance is contingent on establishing a satisfactory stand of perennial grass. Sod application areas are acceptable when all requirements including maintenance are met and a healthy, evenly colored, viable stand of grass is established. A satisfactory stand of grass must have a root system that is sufficient to survive dry periods and winter weather and is capable of re–establishing in the spring.

Sod

Do not use sodding on slopes steeper than 2H:1V, and if sodding is mowed, do not place on slopes greater than 3H:1V. Install Warm Season Sod between March 1st and September 1st. Install Cool Season Sod anytime during the year as long as the soil is not frozen. Do not place Sod on:

- Soil that is frozen and/or when the 10–day forecasted low temperature remains below 35 degrees Fahrenheit;
- Soil that is excessively wet;
- Soil that is excessively dry (periods of heat or drought) unless watering is specified;
- Soil that is composed of compacted clay; and
- Soil than has been treated with pesticides.

Sod Bed Preparation

- Ensure the Sod bed is uniform and conforms to the finished grade of the Project.
- Loosen the Sod Bed to a minimum depth of 3 inches before placing Sod.
- Furnish and place topsoil or compost in the Sod Bed in areas where the existing Sod Bed has little or no topsoil,
- Lay Sod when Sod Bed is moist. Moisten dry Sod Beds before sod is laid.

Sod Material

Provide Sod with living, well–established growth, with a dense root mat of predominant grass Specified. Provide vigorous, well rooted, healthy turf, free from disease, insect pests, weeds, other grasses, stones, and any other harmful or detrimental materials.

Sod Installations

Ensure Sod is not installed until the end of the project or when final stabilization is achieved on adjacent areas of the project that drain or discharge to the Sod application.

Amendments

Lime

Agricultural Granular Lime

Use agricultural grade, standard ground limestone for all permanent seeding applications and Sodding applications.

Applying Granular Lime

A soil analysis is recommended prior to application. Apply at a rate within ±10% of weight recommendation of soil analysis. Do not apply more than 2,500 lbs/acre of in a single application.

Fast Acting Lime

Use fast acting liquid and/or dry forms of lime for all temporary seeding and permanent seeding applications.

Fertilizer

Granular Fertilizer

Use for all permanent seeding applications and all Sodding applications. Proper mixture is dependent on the existing soil conditions and it is recommended that a soil analysis be performed if the soil conditions are uncertain in the area of fertilizer application.

Use fertilizer that incorporates a minimum of 50% water insoluble (slow release) nitrogen. Animal by–product or municipal waste fertilizers are not acceptable under this Specification.

Unless a soil analysis is performed to determine otherwise, a good rule of thumb granular fertilizer to apply in the Upstate of South Carolina is 10–10–10. In no case should a 20–20–20 fertilizer be used due to the potential burning of the seedbed.

Compost Soil Amendment

For seedbeds that have little or no topsoil, are highly acidic, or are lacking sufficient nutrients to sustain a health stand of grass place, and mix certified weed free compost into the seedbed to ensure a good stand of grass.

Biological Growth Stimulant

Use for all permanent seeding, Sodding, and temporary seeding applications. Animal by–products or municipal waste products are not acceptable. Liquid fertilizers are not acceptable, and can cause burning of the seedbed if applied as such.

Seeding Dates and Rates of Application

Perform seeding during the periods and at the rates specified in the seeding tables. Do not use temporary cover by seeding or permanent seeding for projects when:

- The ground is frozen and/or when the 10–day forecasted low temperature remains below 35 degrees Fahrenheit;
- The ground is excessively wet; or
- The ground is excessively dry (periods of drought) unless watering is specified.

During periods of adverse conditions, use temporary cover by mulch.

Seedbed Preparation

- Ensure that the areas receiving permanent seeding are uniform and conform to the finished grade of the Project.
- Perform minor shaping and evening of uneven and rough areas outside of the graded area in order to provide for more effective erosion control and for ease of subsequent mowing operations.
- Loosen the seedbed (including cut slopes) to a minimum depth of three (3) inches before initiating permanent seeding and temporary seeding.
- An acceptable method of preparing the seedbed on slopes is vertically tracking the seedbed up and seedbed up and down the slope with proper equipment.
- Remove stones larger than two and one–half (2½) inches in any dimension, large dirt clods, roots, or other debris brought to the surface.
- Use compost if good seedbed material is not located on site or results of the soil test show the seedbed is excessively nutrient deficient to the extent of requiring costly fertilizer additions and or have excessively low pH values (lower than 5.0).
- Consider the use of mechanical seed drills to perform permanent seeding on areas where temporary seeding or temporary cover by mulch was previously utilized.

Mulch

Required for all permanent seeding, temporary seeding, and temporary cover applications. Do not use Mulch in areas where concentrated flow is expected. Use HECP Mulch for temporary seeding and temporary cover applications when the application area will require additional grading prior to permanent seeding. Do not use Erosion Control Blankets (ECB) or Turf Reinforcement Matting (TRM) in this situation.

Wood Chip Mulch

Wood chip mulch is not acceptable for seeding applications. If wood chip mulch is used for temporary cover by mulch, it must be removed prior to performing permanent seeding

Straw or Hay Mulch with Tackifier

Use material that is certified weed. Do not use on slopes steeper than 4H:1V. Anchor using one of the following tacking agents:

- Organic or Chemical Tackifier
- Hydraulic Straw Tackifiers
- Emulsified Asphalt

Applying Straw or Hay Mulch

Uniformly apply material at the rate of 2,000 pounds per acre.

Compost Mulch

Only use from producer that participates in the USCC STA program. Do not use materials that have been treated with chemical preservatives as a compost mulch. Do not use mixed municipal solid waste compost.

Hydraulic Erosion Control Products (HECPs)

Use as an allowable mulch for temporary cover by mulch, temporary cover by seeding or permanent cover by seeding applications. Do not use as a channel liner or for areas receiving concentrated flow.

Temporary Erosion Control Blankets (ECB) and Turf Reinforcement Matting (TRM)

Consider for permanent seeding application areas with steep slopes or areas where there is a significant erosion problem or potential for erosion. Use in areas where concentrated flow is expected. Do not use for temporary seeding applications when the application areas will require additional grading or modifications prior to permanent seeding.

Protection of Structures

Cover any parts of bridges, culverts, guardrails, signs, sidewalks, curb and gutters, catch basins, pipe ends, and other structures as necessary to prevent discoloration before spraying HECPs, organic or chemical tackifiers.

Slope Interruption Devices

The maximum allowable continuous slope length for straw or hay mulch, HECPs, compost and ECB applications is 50 feet. Slope interruption devices (such as sediment tubes) or TRMs are required for continuous slope length longer than 50 feet.

Inspection

Ensure that all seed, Sod, fast acting lime, biological growth stimulants, agricultural granular lime, granular fertilizer, straw and hay mulch, HECPs, compost mulch, and ECBs are applied as Specified. The Design Engineer or Landscape Architect, or member of the Design Engineer or Landscape Architect staff must document on–site that these materials are applied correctly by completing and signing proper forms.

Maintenance

Perform all maintenance necessary to keep Stabilization areas in a satisfactory condition until the work is finally accepted. This includes mowing, repairing areas of erosion and washes, and applying additional seed, fertilizer, and mulch to areas where a satisfactory stand of grass has not been achieved.

Mowing

Mow road shoulders and medians when vegetation reaches a height of approximately 18 to 24 inches. Do not perform excessive mowing of Slopes resulting in ruts, furrows or grooves. Do not perform excessive mowing of Slopes that inhibits the establishment of the slope vegetation.Do not perform mowing when soil and weather conditions are such that rutting or other damage to the Project may occur.

Ensure mowing results in a uniform vegetation height of 4 to 6 inches, unless otherwise directed. When utilizing a nurse crop for permanent seeding, mow Millet (no lower than 3 inches) once it reaches a height of 18 inches to reduce competitiveness with the permanent vegetation. Mow Wheat and Rye Grain (no lower than 3 inches) once they reach a height of 6–8 inches to reduce competitiveness with permanent vegetation.

MULCH APPLICATION TABLE

Mulch	Applicable Slopes (H:V)[1]	Minimum Application Rate (lbs/acre -dry)[2]
Wood Chips	≤ 4:1	500 CY/acre
Straw or Hay with Tackifier	≤ 4:1	2,000
HECP Type 1	≤ 4:1	2,000
HECP Type 2	4:1< S ≤ 3:1	2,500
HECP Type 3	3:1< S ≤ 2:1	3,000
HECP Type 4	2:1< S ≤ 1:1	3,500
	>1:1	4,000 (temp cover only)[3]
Compost Mulch	≤ 2:1	200 CY/acre

1 The maximum allowable continuous slope length for all mulch applications is 50 feet. Slope interruption devices or TRMs are required for continuous slope length longer than 50 feet.

2 Strictly comply with the manufacturer's mixing recommendations for the actual slope steepness and the actual continuous slope length of the application.

3 HECP Type 4 may be used for permanent cover applications on slopes 1:1 or greater at a minimum rate of 4,500 pounds per acre.

ECB and TRM APPLICATION TABLE

ECB/TRM Type[1]	Slope (H:V)[2]	Minimum Slope Length (ft)
Temporary ECB or Type 1 TRM	≤ 2:1	5
Type 2 TRM	≤ 1.5:1	5
Type 3 TRM	≤ 1:1	5

1 Strictly comply with the manufacturer's specifications.

2 The maximum allowable continuous slope length for ECBs is 50 feet. Slope interruption devices or TRMs are required for continuous slope length longer than 50 feet.

Non Slope Areas

Spring / Summer Non Slope Areas (during establishment, mow when Millet reaches 18-inches in height)

Common Name[4]	Botanical Name	Planting Rate (lbs/acre)	Planting Rate (lbs/1000sf)	Jan	Feb	Mar	Apr	May	Jun	Jul	Aug	Sep	Oct	Nov	Dec
Common Bermudagrass[1] (hulled = hull absent)	*Cynodon dactylon*	50	1.15				•	•	•	•					
White Clover	*Trifolium repens*	5	0.11			•	•				•				
Browntop Millet	*Panicum ramosum*	10	0.23				•	•	•	•	•				

Fall / Winter Non Slope Areas (during establishment, mow when Rye reaches 6 to 8-inches in height)

Common Name[4]	Botanical Name	Planting Rate (lbs/acre)	Planting Rate (lbs/1000sf)	Jan	Feb	Mar	Apr	May	Jun	Jul	Aug	Sep	Oct	Nov	Dec
Tall Fescue (KY-31)	*Festuca arundinacea*	50	1.15	•	•	•	•					•	•	•	•
Common Bermudagrass[1] (unhulled = hull present)	*Cynodon dactylon*	15	0.34	•	•	•					•	•	•	•	•
White Clover	*Trifolium repens*	5	0.11		•	•	•					•	•	•	
Crimson Clover[2]	*Trfolium incarnatum*	20	0.46	•	•	•	•					•	•	•	•
Rye Grain[3]	*Secale cereale*	15	0.34	•	•	•	•					•	•	•	•

[1] Common Bermudagrass: Do not use Giant Bermudagrass(NK-37).
[2] Only use pre-inoculated legumes or use an appropriate inoculant with the seed at planting.
[3] Mow Rye Grain (no lower than 3 inches) once it reaches a height of 6-8 inches to reduce competitiveness with permanent vegetation.
[4] If the Common Name of the seed listed in the Tables is not available, use seed with the listed Botanical Name.

Road Medians & Shoulders

Spring / Summer Road Median & Shoulders (during establishment, mow when Millet reaches 18-inches in height)

Common Name[4]	Botanical Name	Planting Rate (lbs/acre)	Planting Rate (lbs/1000sf)	Jan	Feb	Mar	Apr	May	Jun	Jul	Aug	Sep	Oct	Nov	Dec
Common Bermudagrass[1] (hulled = hull absent)	*Cynodon dactylon*	25	0.57				•	•	•	•					
Browntop Millet	*Panicum ramosum*	10	0.23				•	•	•	•	•				

Fall / Winter Road Median & Shoulders (during establishment, mow when Rye reaches 6 to 8-inches in height)

Common Name[4]	Botanical Name	Planting Rate (lbs/acre)	Planting Rate (lbs/1000sf)	Jan	Feb	Mar	Apr	May	Jun	Jul	Aug	Sep	Oct	Nov	Dec
Tall Fescue (KY-31)	*Festuca aruninacea*	50	1.15	•	•	•	•					•	•	•	•
Common Bermudagrass[1] (unhulled = hull present)	*Cynodon dactylon*	15	0.34	•	•	•						•	•	•	•
Crimson Clover[2]	*Trfolium incarnatum*	20	0.46	•	•	•					•	•	•	•	•
Rye Grain[3]	*Secale cereale*	15	0.34	•	•	•					•	•	•	•	•

[1] Common Bermudagrass: Do not use Giant Bermudagrass(NK-37).
[2] Only use pre-inoculated legumes or use an appropriate inoculant with the seed at planting.
[3] Mow Rye Grain (no lower than 3 inches) once it reaches a height of 6-8 inches to reduce competitiveness with permanent vegetation.
[4] If the Common Name of the seed listed in the Tables is not available, use seed with the listed Botanical Name.

Slopes & Buffers

Spring / Summer Slopes (during establishment, mow when Millet reaches 18-inches in height. After establishment, only mow at end of winter season)

	Common Name[4]	Botanical Name	Planting Rate (lbs/acre)	Planting Rate (lbs/1000sf)	Jan	Feb	Mar	Apr	May	Jun	Jul	Aug	Sep	Oct	Nov	Dec
Pick 1	Tall Fescue (KY-31)	*Festuca aruninacea*	50	1.15			•	•								
Pick 1	Bahiagrass	*Paspalum notatum*	30	0.69			•	•	•	•	•					
Pick 1	Common Bermudagrass[1] (hulled = hull absent)	*Cynodon dactylon*	15	0.34				•	•	•	•					
	White Clover	*Trifolium repens*	5	0.11			•	•				•				
	Weeping Lovegrass	*Erograstis curvula*	5	0.11			•	•	•	•	•	•				
	Hairy Vetch[2]	*Vicia villosa*	10	0.23				•								
	Browntop Millet	*Panicum ramosum*	10	0.23				•	•	•	•	•				

Fall / Winter Slopes (during establishment, mow when Rye reaches 6 to 8-inches in height. After establishment, only mow at end of winter season)

	Common Name[4]	Botanical Name	Planting Rate (lbs/acre)	Planting Rate (lbs/1000sf)	Jan	Feb	Mar	Apr	May	Jun	Jul	Aug	Sep	Oct	Nov	Dec
	Tall Fescue (KY-31)	*Festuca aruninacea*	50	1.15	•	•	•						•	•	•	•
	Common Bermudagrass[1] (unhulled = hull present)	*Cynodon dactylon*	15	0.34	•	•	•						•	•	•	•
	White Clover[2]	*Trifolium repens*	5	0.11		•	•						•	•	•	
	Weeping Lovegrass	*Erograstis curvula*	5	0.11	•	•	•						•	•	•	•
Pick 1	Crimson Clover[2]	*Trfolium incarnatum*	20	0.46	•	•	•						•	•	•	•
Pick 1	Hairy Vetch[2]	*Vicia villosa*	10	0.23	•	•	•						•	•	•	•
	Rye Grain[3]	*Secale cereale*	15	0.34	•	•	•						•	•	•	•

[1] Common Bermudagrass: Do not use Giant Bermudagrass(NK-37).
[2] Only use pre-inoculated legumes or use an appropriate inoculant with the seed at planting.
[3] Mow Rye Grain (no lower than 3 inches) once it reaches a height of 6-8 inches to reduce competitiveness with permanent vegetation.
[4] If the Common Name of the seed listed in the Tables is not available, use seed with the listed Botanical Name.

GREENVILLE COUNTY SEEDING/STABILIZATION NOTES

SOUTH CAROLINA LICENSED PROFESSIONAL ENGINEER No. 26505 CARLA MUSCARELLA 10/17/16

SEAL

SOUTH CAROLINA CERTIFICATE OF AUTHORIZATION WOOLPERT, INC. No. C02990

COA

No.	DATE	REVISION

PROJECT No: 74840
DATE 04/04/16
DES. WLPRT
DR. VT
CKD. PAS

WOOLPERT
2000 Center Point Road
Suite 2200
Columbia, SC 29210
803.731.0261
FAX: 803.731.0132

MERRIFIELD STORM WATER IMPROVEMENTS
GREENVILLE COUNTY
SOUTH CAROLINA

DETAILS

SHEET NO.
C300

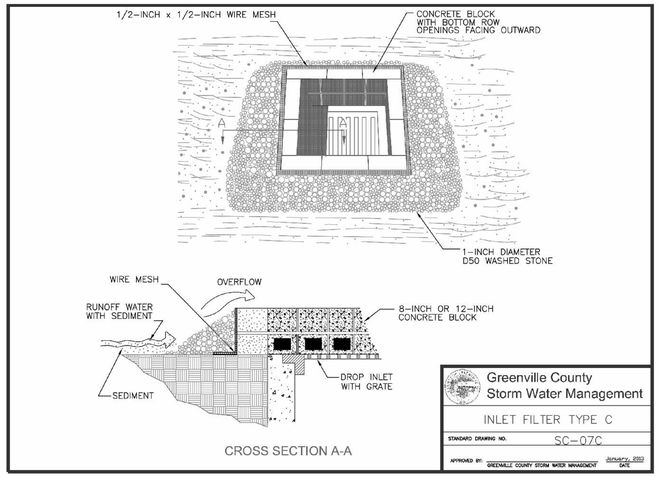

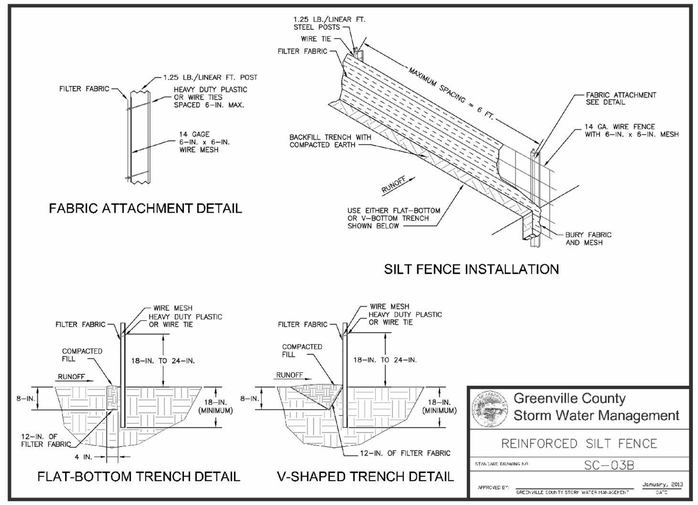

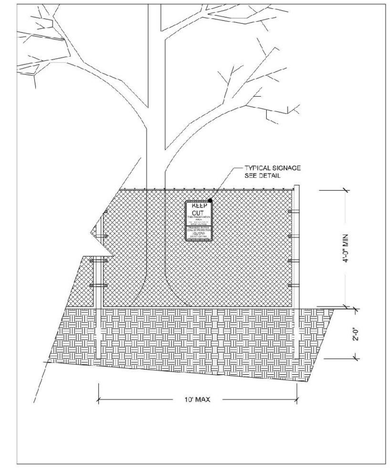

SECTION

SIGN DETAIL

TREE PROTECTION FENCING NOTES

1. TREE PROTECTION SHALL FENCE SHALL BE MINIMUM 5 FEET TALL CONSTRUCTED OF STURDY MATERIAL (CHAIN LINK OR EQUIVALENT STRENGTH/DURABILITY), MOUNTED ON VERTICAL PIPES DRIVEN 2'-0" IN THE GROUND, AT APPROXIMATELY 8'-0" TO 10'-0" (MAX.) ON CENTER, WITH NO GATES.

IN AREAS WHERE SUPER SILT FENCE (SSF) AND TREE PROTECTION FENCE RUN PARALLEL, SSF MAY BE UTILIZED FOR TREE PROTECTION PURPOSES UPON APPROVAL BY THE CITIES' URBAN FORESTER.

2. TREE PROTECTION FENCING SHALL BE ERECTED AT THE CRITICAL ROOT ZONE OR BEYOND PRIOR TO START OF ANY CLEARING,GRADING, OR OTHER CONSTRUCTION ACTIVITY. SIGNS STATING "NO ENTRY, TREE PROTECTION AREA, CALL 864467-4345 TO REPORT VIOLATIONS' ARE TO BE POSTED IN BOTH ENGLISH AND SPANISH. SEE REFERENCE DETAIL 2.A. TREE PROTECTION SHALL NOT BE REMOVED UNTIL COMPLETION OF ALL CONSTRUCTION ACTIVITY.

3. FOR QUESTIONS RELATED TO TREE PROTECTION OR FOR FIELD INSPECTION OF TREE PROTECTION, CONTACT THE CITIES URBAN FORESTER AT 864-467-4345

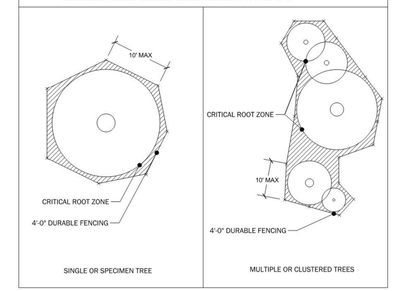

PLAN

TREE PROTECTION FENCE DETAIL

N.T.S.

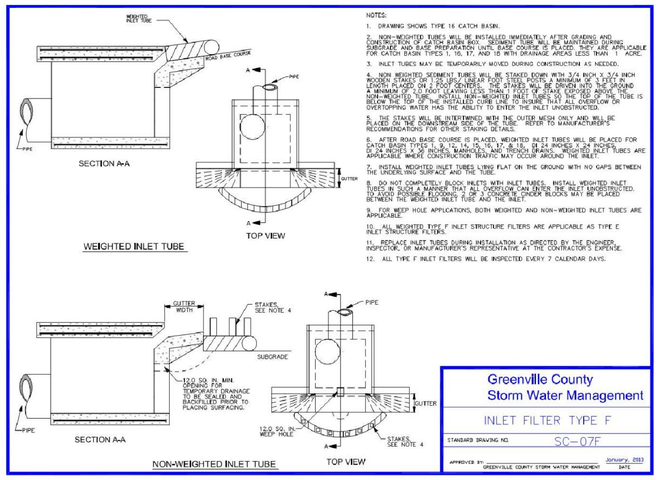

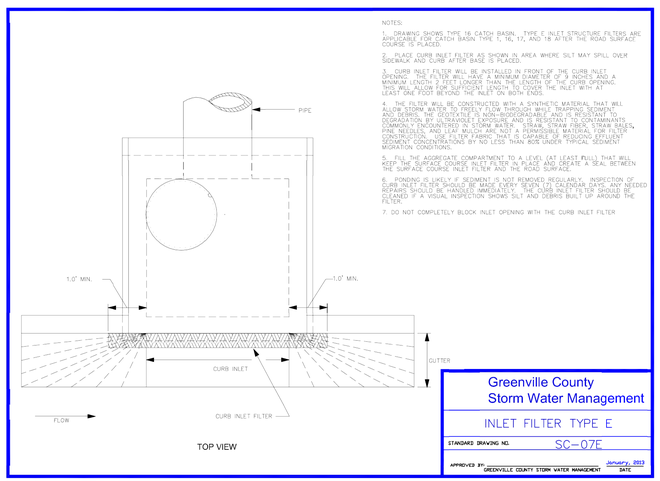

SOUTH CAROLINA PROFESSIONAL ENGINEER 10/27/16 No. 26505 MARIA MUCCARELLI
SEAL

SOUTH CAROLINA WOOLPERT, INC. No. C02990 CERTIFICATE OF AUTHORIZATION
COA

No.	DATE	REVISION

PROJECT No: 74840
DATE 04/04/16
DES. WLPRT
DR. VT
CKD. PAS

2000 Center Point Road
Suite 2200
Columbia, SC 29210
803.731.0261
FAX: 803.731.0132
WOOLPERT

MERRIFIELD STORM WATER IMPROVEMENTS

GREENVILLE COUNTY
SOUTH CAROLINA

DETAILS

SHEET NO.
C301

G:\IPW\Projects\SC_Greenville_CO\074840_Rocky_Creek_Watershed\Merrifield\Data\CAD\Plan_Sheets\05_Merrifield_C300-C303_Details.dwg, C301, 8/10/2016 9:15:51 AM, 1:1

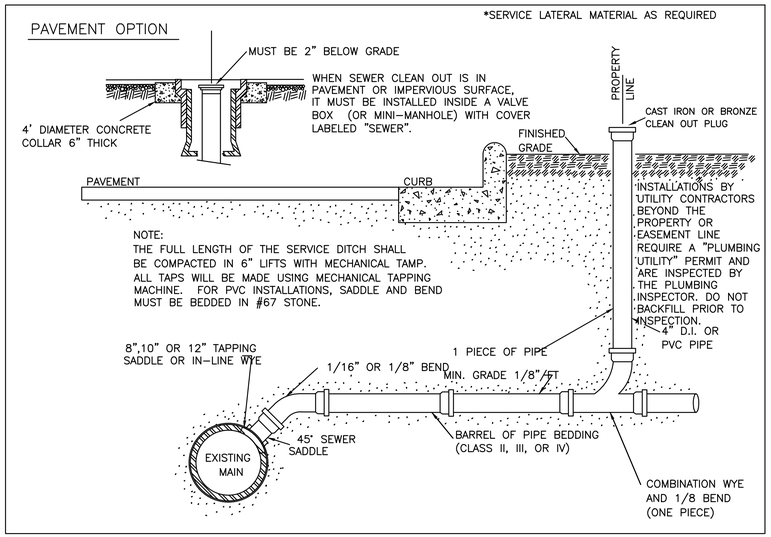

SEWER LATERAL / SERVICE DETAIL

N.T.S.

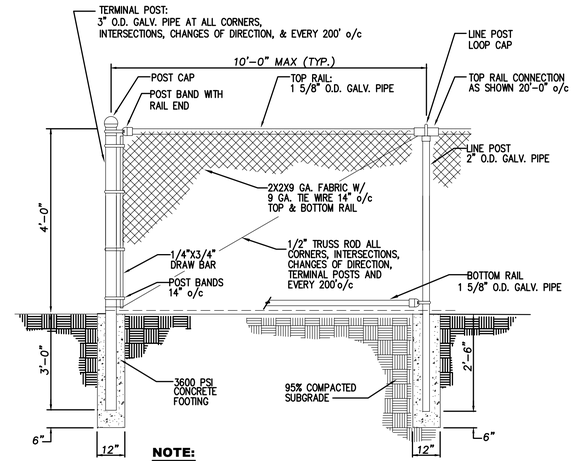

NOTE:

1. ALL THREADS TO BE CUT DOWN TO TWO THREADS MAXIMUM ABOVE BOLTS AND COATED WITH GALVANIZED PAINT. TYPICAL FOR ALL FENCING.

4' CHAINLINK FENCE DETAIL

N.T.S.

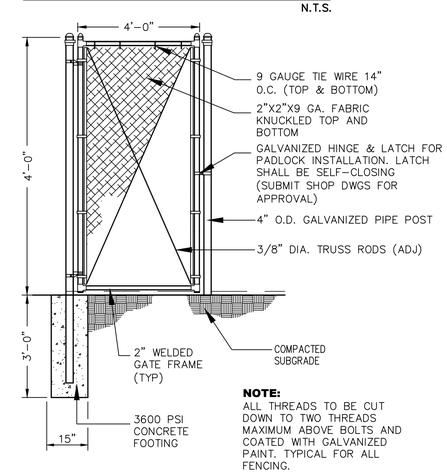

NOTE:
ALL THREADS TO BE CUT DOWN TO TWO THREADS MAXIMUM ABOVE BOLTS AND COATED WITH GALVANIZED PAINT. TYPICAL FOR ALL FENCING.

4' ACCESS GATE DETAIL

N.T.S.

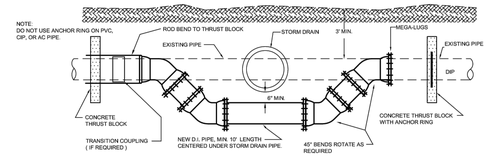

VERTICAL OFFSET WATERLINE DETAIL

N.T.S.

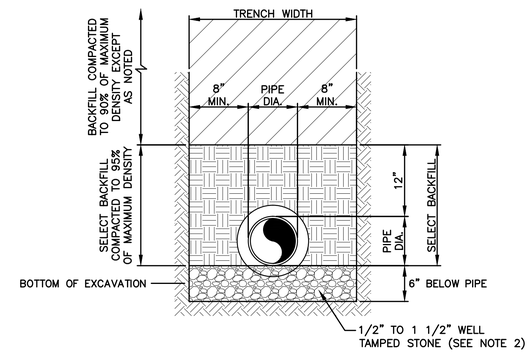

NOTES:

1. BACKFILL COMPACTED TO 92% FOR COMPACTED MAXIMUM DENSITY EXCEPT FOR TOP 8 INCHES, TO 95% UNDER STRUCTURES SLABS AND PAVED AREAS.
2. STONE IS REQUIRED FOR GRAVITY SEWER LINES AND FOR WATER LINES WHERE WET CONDITIONS EXIST, UNLESS OTHERWISE DIRECTED BY ENGINEER.
3. HAND SHAPE TRENCH BOTTOM FOR LOWER QUADRANT OF PIPE AND BELLS.
4. PROVIDE MINIMUM 3'-0" COVER OVER PIPE.

STANDARD TRENCH DETAIL FOR WATER LINES AND SEWER LINES

N.T.S.

NOTES:

1. CONTRACTION JOINTS SHALL BE SPACED AT 10-FOOT INTERVALS. JOINT SPACING MAY BE ALTERED BY THE ENGINEER TO PREVENT UNCONTROLLED CRACKING.
2. CONTRACTION JOINTS MAY BE INSTALLED BY THE USE OF TEMPLATES OR FORMED BY OTHER APPROVED METHODS. WHERE SUCH JOINTS ARE NOT FORMED BY TEMPLATES, A MINIMUM DEPTH OF 1 1/2" SHALL BE OBTAINED.
3. ALL EXPANSION JOINTS SHALL BE SPACED AT 90-FOOT INTERVALS, AND ADJACENT TO ALL RIGID OBJECTS. JOINTS SHALL MATCH LOCATIONS WITH JOINTS IN ABUTTING SIDEWALK.
4. CONCRETE COMPRESSIVE STRENGTH SHALL BE 3600 P.S.I. IN 28 DAYS.
5. CURB SHALL BE DEPRESSED AT INTERSECTIONS TO PROVIDE FOR FUTURE ACCESSIBLE RAMPS.
6. TOP 6" OF SUBGRADE BENEATH THE CURB SHALL BE COMPACTED TO 100% STANDARD PROCTOR DENSITY.
7. DETAIL MAY BE USED FOR PRIVATE DRIVES, PARKING LOTS, AND INTERIOR CIRCULATION DRIVE.

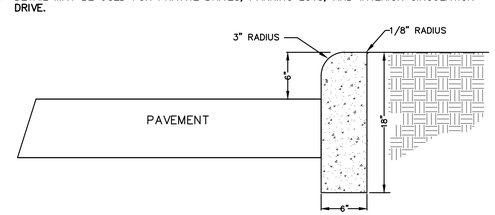

18" VERTICAL CURB DETAIL

OPEN CUT REPAIR FOR CONCRETE PAVEMENT

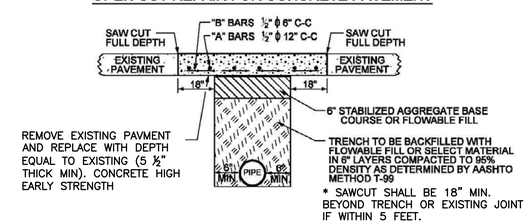

* SAWCUT SHALL BE 18" MIN. BEYOND TRENCH OR EXISTING JOINT IF WITHIN 5 FEET.

OPEN CUT REPAIR FOR LOW VOLUME ASHALT PAVEMENT

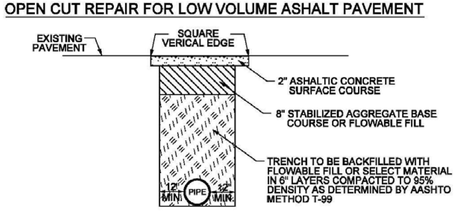

TYPICAL PAVEMENT REPAIR

N.T.S.

SOUTH CAROLINA PROFESSIONAL ENGINEER 10/27/16 No. 26505 MICAREL MUNOZ-MEDINA SEAL

SOUTH CAROLINA WOOLPERT, INC. No. C02990 CERTIFICATE OF AUTHORIZATION COA

No.	DATE	REVISION

PROJECT No: 74840
DATE 04/04/16
DES. WLPRT
DR. VT
CKD. PAS

2000 Center Point Road
Suite 2200
Columbia, SC 29210
803.731.0261
FAX: 803.731.0132
WOOLPERT

MERRIFIELD STORM WATER IMPROVEMENTS

GREENVILLE COUNTY
SOUTH CAROLINA

DETAILS

SHEET NO.
C302

STANDARD DRAWING 719-009-01 — CATCH BASIN TYPE 9 & 9MH DETAILS

REFERENCES
NATIONAL DOCUMENTS
AASHTO M235
SCDOT DOCUMENTS
QUALIFIED PRODUCT LIST 14
RELATED DRAWINGS & KEYWORDS
719-310-00, 719-305-00, 719-009-01 TO 719-009-05

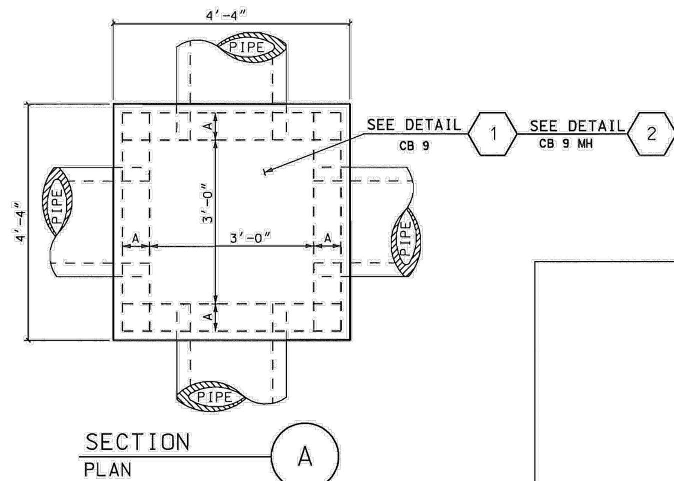

CONTRACTOR MAY USE PRECAST OR BUILT IN PLACE CONSTRUCTION NOTED ABOVE OR COMBINE OPTIONS AS DESIRED.

SEE QUALIFIED PRODUCT LIST 14 FOR MANUFACTURERS OF PRECAST ITEMS.

BUILT IN PLACE	① CB 9 BOTTOM SLAB (PC OR CIP 52"X52"X6") AND ② BRICK WALLS (8") AND ④ CB 9 PC TOP SLAB WITH THROAT LEGS (52"X52"X10") OR ⑤ CB 9 MH PC TOP SLAB WITH THROAT LEGS (52"X52"X10")
ALTERNATE BUILT IN PLACE	① CB 9 BOTTOM SLAB (PC OR CIP 52"X52"X6") AND ② BRICK WALLS (8") AND ⑥ BRICK THROAT (2 COARSE) AND ⑦ CB 9 PC TOP SLAB WITHOUT THROAT LEGS (52"X52"X5") OR ⑧ CB 9 MH PC TOP SLAB WITHOUT THROAT LEGS (52"X52"X5")
PRECAST	③ PC DRAINAGE BOX CONFORMING TO 719-310-00 OR 719-305-00 (3'X3'X__) (MAX 12' DEPTH) AND ④ CB 9 PC TOP SLAB WITH THROAT LEGS (52"X52"X10") OR ⑤ CB 9 MH PC TOP SLAB WITH THROAT LEGS (52"X52"X10")

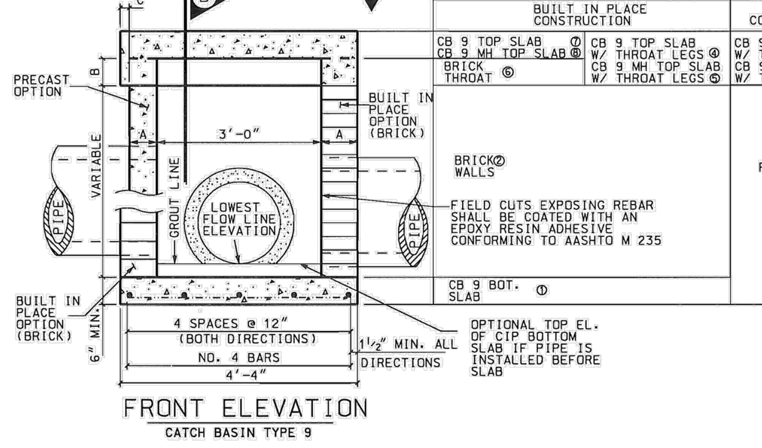

BUILT IN PLACE CONSTRUCTION		PRECAST CONSTRUCTION
CB 9 TOP SLAB ⑦ CB 9 MH TOP SLAB ⑧ BRICK THROAT ⑥	CB 9 TOP SLAB W/ THROAT LEGS ④ CB 9 MH TOP SLAB W/ THROAT LEGS ⑤	CB 9 TOP SLAB W/ THROAT LEGS ④ CB 9 MH TOP SLAB W/ THROAT LEGS ⑤
BRICK② WALLS; FIELD CUTS EXPOSING REBAR SHALL BE COATED WITH AN EPOXY RESIN ADHESIVE CONFORMING TO AASHTO M 235		PC BOX③
CB 9 BOT. SLAB ①		

OPTIONAL TOP EL. OF CIP BOTTOM SLAB IF PIPE IS INSTALLED BEFORE SLAB

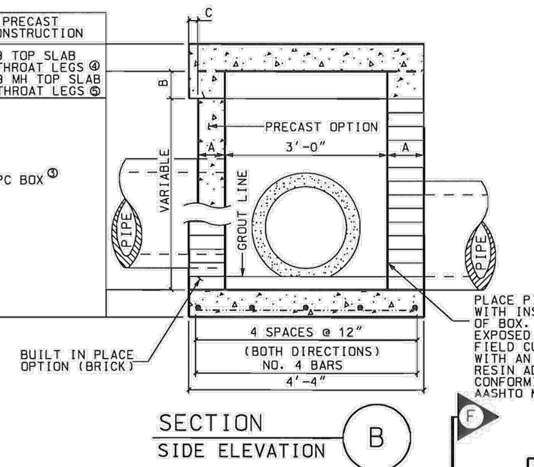

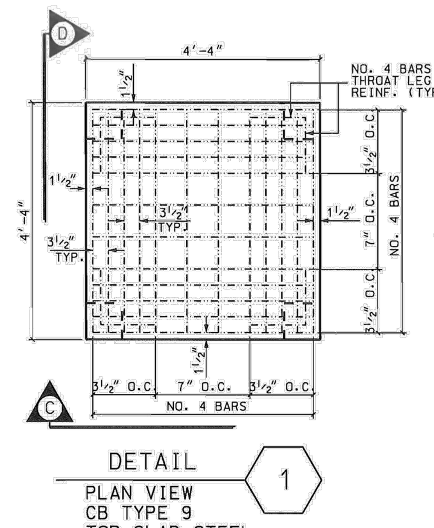

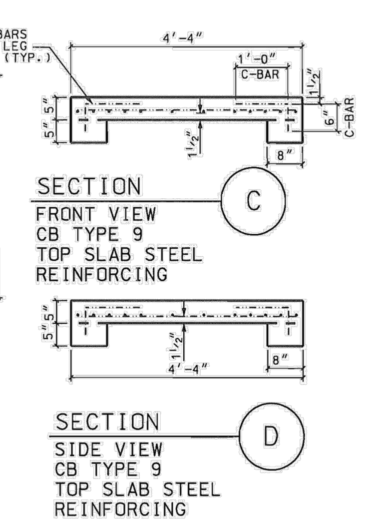

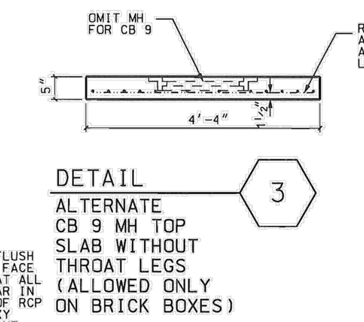

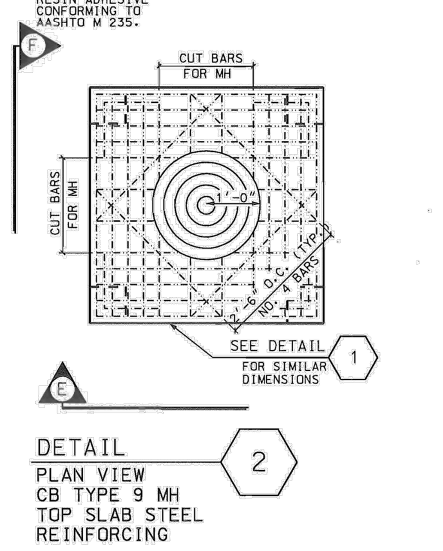

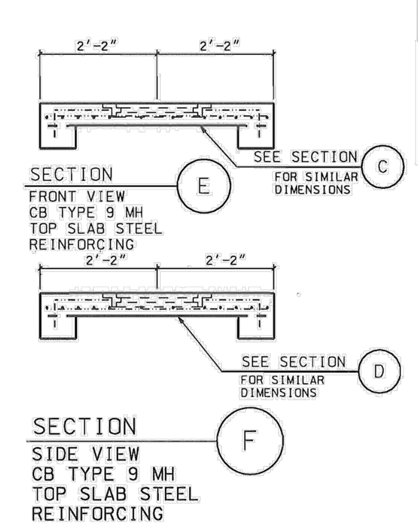

PRECAST ITEMS
CB 9 BOTTOM SLAB (52"X52"X6")
CB 9 TOP SLAB WITH THROAT LEGS (52"X52"X10")
CB 9 MH TOP SLAB WITH THROAT LEGS (52"X52"X10")
ALTERNATE CB 9 TOP SLAB WITHOUT THROAT LEGS (52"X52"X5")
SEE ALSO STD. DRAWING 719-310-00 & 719-305-00

TABLE 719-009A

DIMENSION LABEL	PRECAST OPTION	BUILT IN PLACE OPTION
A	6"	8"
B	5"	2 COURSE OF BRICK
C	2"	0

PRECONSTRUCTION SUPPORT ENGINEER

SOUTH CAROLINA REGISTERED PROFESSIONAL ENGINEER NO. 8858 EDWIN SYLVESTER EARGLE, II

SIGNATURE — MARCH 3, 2008 — DATE

#	DATE	CHK	DESCRIPTION
6			
5			
4			
3			
2			
1			
0	3/2008	DSO	GENERAL REVISIONS

SCDOT — SOUTH CAROLINA DEPARTMENT OF TRANSPORTATION
DESIGN STANDARDS OFFICE
955 PARK STREET
ROOM 405
COLUMBIA, SC 29201

STANDARD DRAWING
CATCH BASIN TYPE 9 & 9MH DETAILS

719-009-01
EFFECTIVE LETTING DATE MAY, 2008

USE SHEETS 719-009-01 THROUGH 719-009-05 FOR THIS ITEM
THIS DRAWING IS NOT TO SCALE

STANDARD DRAWING 719-009-03 — CATCH BASIN TYPE 9 & 9 MH DITCH INSTALLATION

REFERENCES
NATIONAL DOCUMENTS

SCDOT DOCUMENTS

RELATED DRAWINGS & KEYWORDS
719-009-01 TO 719-009-02, 719-009-01 TO 719-009-05

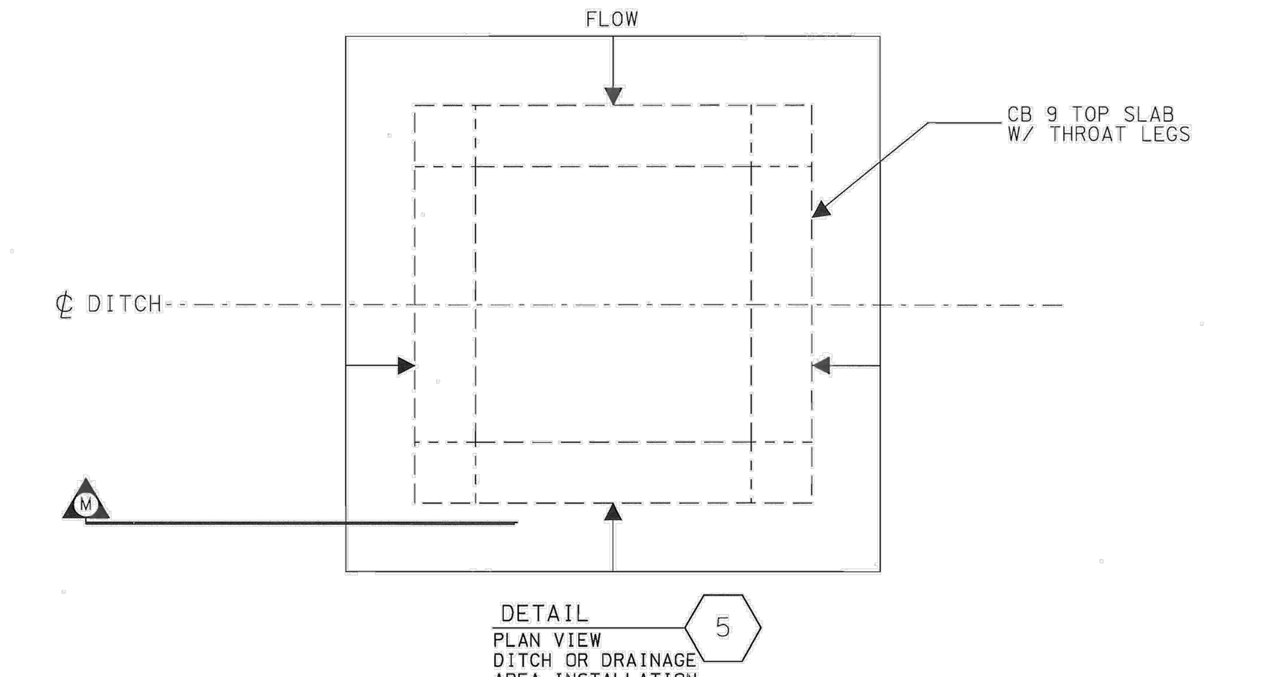

NOTES:

1. FOLLOW MATERIAL AND DIMENSION REQUIREMENTS OF CATCH BASIN TYPE 9 (719-009-01 AND 719-009-02).

2. CATCH BASIN TYPE 9 DITCH INSTALLATION MAY BE USED IN LIEU OF OLD STYLE CATCH BASIN TYPE 14 MODIFIED.

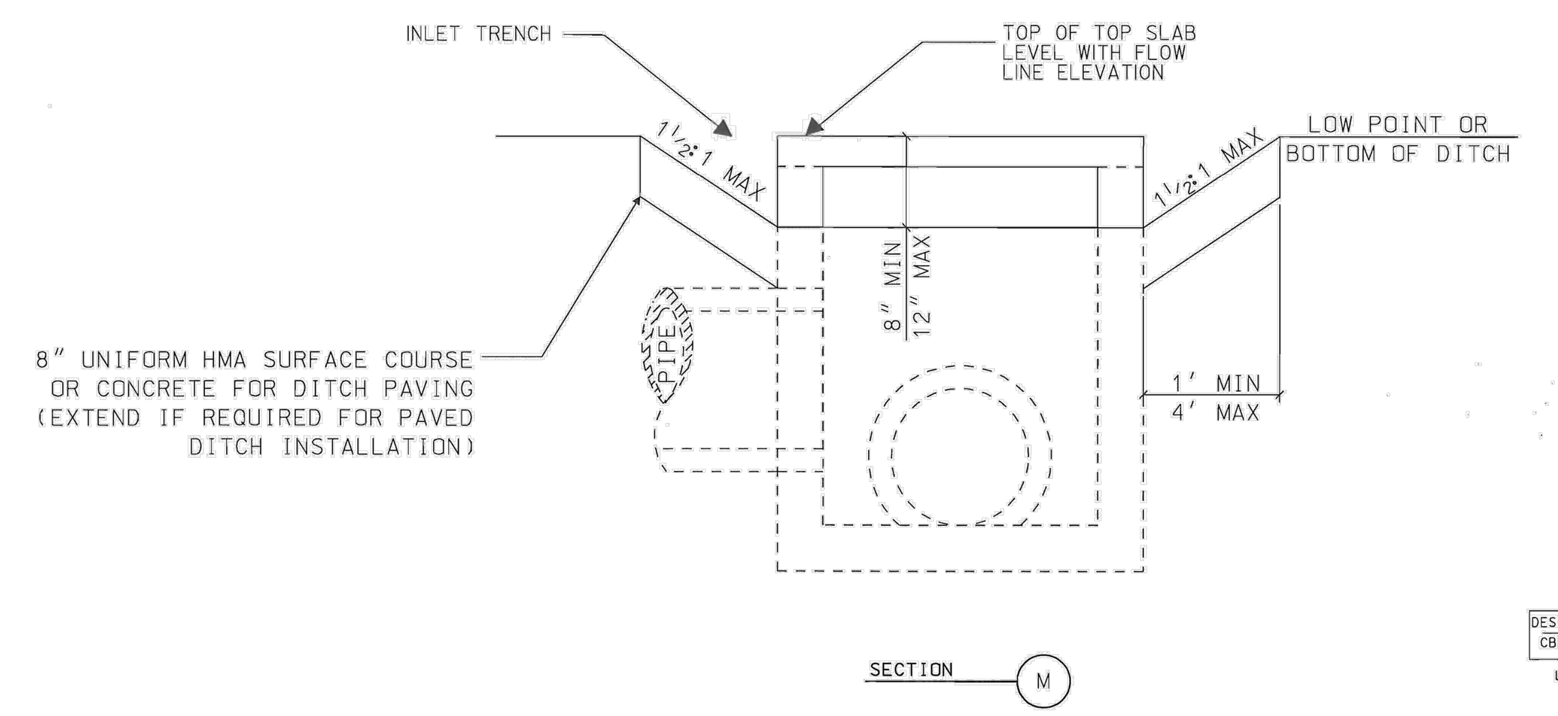

DESCRIPTION	ADA	NON ADA BICYCLE	VEHICLE
CB TYPE 9	NO	NO	NO

USE WHERE PROTECTED FROM TRAFFIC.

PRECONSTRUCTION SUPPORT ENGINEER

SOUTH CAROLINA REGISTERED PROFESSIONAL ENGINEER NO. 8858 EDWIN SYLVESTER EARGLE, II

SIGNATURE — MARCH 3, 2008 — DATE

#	DATE	CHK	DESCRIPTION
6			
5			
4			
3			
2			
1			
0	3/2008	DSO	NEW STANDARD

SCDOT — SOUTH CAROLINA DEPARTMENT OF TRANSPORTATION
DESIGN STANDARDS OFFICE
955 PARK STREET
ROOM 405
COLUMBIA, SC 29201

STANDARD DRAWING
CATCH BASIN TYPE 9 & 9 MH DITCH INSTALLATION

719-009-03
EFFECTIVE LETTING DATE MAY, 2008

USE SHEETS 719-009-01 THROUGH 719-009-05 FOR THIS ITEM
THIS DRAWING IS NOT TO SCALE

STANDARD DRAWING 719-001-01 — CATCH BASIN TYPE 1 DETAILS

REFERENCES
NATIONAL DOCUMENTS
AASHTO M235
SCDOT DOCUMENTS
QUALIFIED PRODUCT LIST 14
RELATED DRAWINGS & KEYWORDS
719-001-01 TO 719-001-04

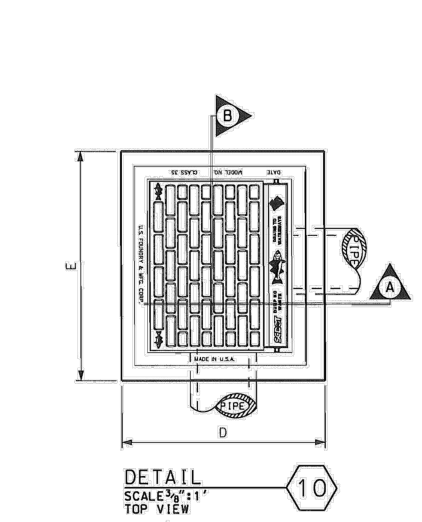

TABLE 719-001A

DIMENSION	BUILT IN PLACE OPTION	PRECAST OPTION
A	8"	6"
B	2'-6"	2'-6"
C	3'-0"	3'-0"
D	3'-10"	3'-6"
E	4'-4"	4'-0"

CONTRACTOR MAY USE PRECAST OR BUILT IN PLACE CONSTRUCTION NOTED ABOVE OR COMBINE OPTIONS AS DESIRED.

SEE QUALIFIED PRODUCT LIST 14 FOR MANUFACTURERS OF PRECAST ITEMS.

BUILT IN PLACE	① CB TYPE 1 BOTTOM SLAB (PC OR CIP 46"X52"X6")
	② BRICK WALLS (8" THICK) (MAXIMUM 12' DEPTH)
	③ CB TYPE 1 FRAME, GRATE, AND HOOD
PRECAST	④ PRECAST BOX CONFORMING TO STD. DRAWING 719-310-00 OR 719-305-00
	③ CB TYPE 1 FRAME, GRATE, AND HOOD

PRECAST ITEMS
TYPE CB 1 BOTTOM SLAB (46"x52"x6")
SEE ALSO STD. DRAWING 719-310-00, 719-305-00, & 719-315-00

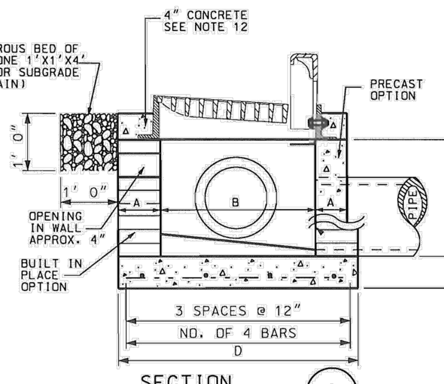

BUILT IN PLACE	PRECAST
CB TYPE 1 FRAME, GRATE, AND HOOD ③	
BRICK ②	PRECAST BOX CONFORMING TO STD. DRAWING 719-310-00 OR 719-305-00 ④
CB TYPE 1 BOTTOM SLAB ①	

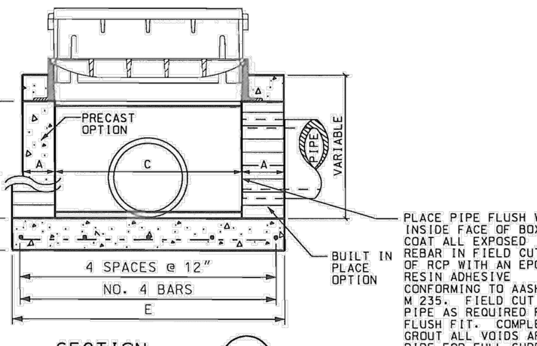

GENERAL NOTES:

1. FOR BUILT IN PLACE CONSTRUCTION OF THE CATCH BASIN, EITHER BRICK MASONRY (WALLS ONLY) OR CIP CLASS 3000 CONCRETE MAY BE USED. FOR PRECAST CONSTRUCTION, A MINIMUM OF CLASS 4000P CONCRETE SHALL BE USED.

2. CONCRETE WALLS ARE TO BE 6" THICK WITH A MINIMUM REINFORCING STEEL AREA OF 0.20 SQUARE INCHES PER FOOT UNLESS NOTED. FOR BRICK, THE WALLS ARE TO BE 8" THICK. CONCRETE BRICK AND SIMILAR SOLID UNITS SHALL CONFORM TO THE REQUIREMENTS OF ASTM C 55, GRADE S-II. THE INTERIOR DIMENSIONS ARE TO REMAIN AS SHOWN FOR EITHER TYPE OF CONSTRUCTION.

3. THE BOTTOM SLAB OF THE BOX SHALL BE A MINIMUM OF 6" THICK REINFORCED CONCRETE (CLASS 3000 OR 4000P) WITH A REINFORCING STEEL AREA OF 0.20 SQUARE INCHES PER FOOT. WIRE MESH MAY BE USED IN LIEU OF STEEL BARS PROVIDED A MINIMUM OF 0.20 SQUARE INCHES PER FOOT IS MET.

4. MORTAR SHALL BE TYPE S OR M.

5. REINFORCING STEEL SHALL BE ASTM A-706, LOW-ALLOY STEEL DEFORMED BARS FOR CONCRETE REINFORCEMENT, GRADE 60. WIRE MESH SHALL CONFORM TO AASHTO M 55 AND M 221.

6. SEE STANDARD DRAWING 719-550-00 FOR STEPS, WHICH ARE REQUIRED WHEN STRUCTURE DEPTH EXCEEDS 4'-6".

7. SEE STANDARD DRAWINGS 719-420-00 AND 719-425-00 FOR DEPTHS GREATER THAN 12'. PRECAST CONCRETE CIRCULAR DRAINAGE STRUCTURES ARE REQUIRED WHEN THE DEPTH FROM THE TOP OF THE DRAINAGE BOX BOTTOM SLAB TO THE TOP OF THE GROUND EXCEEDS 12'-0".

8. LOCATION AND SIZE OF PIPES ARE SITE SPECIFIC. (SEE DRAINAGE PLANS). THE BOTTOM OF THE CATCH BASIN IS TO BE GROUTED TO THE LOWEST FLOW LINE ELEVATION OF ALL PIPES. IF BOTTOM SLAB IS CAST IN PLACE WITH PIPES INSTALLED, BOTTOM SLAB THICKNESS MUST BE ACHIEVED BEYOND PIPE OUTSIDE DIAMETER.

9. THE CONTRACT UNIT PRICE FOR CATCH BASINS SHALL INCLUDE THE COST OF FURNISHING ALL MATERIALS, (BUILT IN PLACE OR PRECAST), AND WORK INCIDENTAL TO THE CONSTRUCTION OF THE STRUCTURE COMPLETE IN PLACE AS SHOWN, INCLUDING THE CURB AND GUTTER, IN ACCORDANCE WITH THE SCDOT STANDARD SPECIFICATIONS FOR HIGHWAY CONSTRUCTION (LATEST EDITION).

10. CASTINGS SHALL CONFORM TO AASHTO M 105, CLASS 35B AND THE SPECIFICATIONS OF AASHTO M 306.

11. (a) STEEL GRATES AND FRAME MAY BE USED IN LIEU OF CAST IRON AS LONG AS THE LOADING (NOTE 11d) AND HYDRAULIC REQUIREMENTS ARE MET, AND ARE ON THE DEPARTMENT'S LIST OF APPROVED SUPPLIERS. (QUALIFIED PRODUCT LIST 45)
(b) STEEL GRATES SHALL BE HOT DIP GALVANIZED IN ACCORDANCE WITH AASHTO M 111.
(c) STEEL GRATES AND FRAMES SHALL BE DIMENSIONED TO BE INTERCHANGEABLE WITH EACH PIECE OF THE CAST IRON GRATE AND FRAME SHOWN. STEEL GRATES MUST HAVE POSITIVE MEANS TO BE RETAINED IN THE FRAME.
(d) STRENGTH REQUIREMENTS OF STEEL GRATES AND FRAMES MUST MEET AASHTO M 306.
(e) MANUFACTURERS DESIRING TO BE PLACED ON THE DEPARTMENT'S QUALIFIED PRODUCT LIST SHOULD CONTACT THE MATERIALS AND RESEARCH ENGINEER FOR PROCEDURES.

12. AFTER THE FRAME AND HOOD ARE SET, THE FINAL 4" OF CLASS 3000 CONCRETE IS TO BE POURED FLUSH WITH THE OUTSIDE EDGE OF THE CATCH BASIN ON ALL SIDES. PROVIDE PROTECTION FOR BOLTS AND NUTS AT FRAME ADJUSTMENT SLOTS. BOLTS AND NUTS SHALL MEET ASTM A-307 AND WILL BE GALVANIZED ACCORDING TO AASHTO M 232.

13. GRATE OPENINGS EXCEED ½" AND ARE NOT SUITABLE FOR PEDESTRIAN TRAFFIC.

14. ALL MANUFACTURING PROCESS FOR THE FRAME, GRATE, AND HOOD MUST OCCUR IN THE UNITED STATES.

15. SEE STANDARD DRAWING 719-305-00 OR 719-310-00 FOR MAXIMUM PIPE DIAMETERS. THE PIPE SIZES SHOWN ARE MAXIMUM FOR BRICK AND PRECAST BOXES WHEN PIPE ENTERS PERPENDICULAR AND AT THE CENTER OF THE BOX WALL. CONTRACTOR SHOULD CONFIRM THAT PIPE USED FITS APPROPRIATELY INTO BOX.

16. ADDITIONAL MATERIAL AND LABOR TO CONSTRUCT FLARED GUTTER TO BE INCLUDED IN THE PAY ITEM CATCH BASIN TYPE 1.

PRECAST NOTES:

17. SUPPLY PRECAST CONCRETE COMPONENTS FOR DRAINAGE ITEMS AT EACH LOCATION FROM A SINGLE SOURCE PRECAST MANUFACTURER THAT HAS BEEN INSPECTED AND APPROVED BY THE MATERIALS AND RESEARCH ENGINEER. SUPPLY ALL INTERCHANGEABLE PRECAST PARTS ON ENTIRE PROJECT FROM A SINGLE SOURCE MANUFACTURER LISTED ON QUALIFIED PRODUCT LIST 14 UNLESS APPROVED BY RCE. ITEMS FROM MULTIPLE MANUFACTURERS SHOULD NOT BE INSTALLED IN INDIVIDUAL LOCATIONS.

18. THE USE OF PRECAST UNITS WILL NOT RELIEVE THE CONTRACTOR OF THE RESPONSIBILITY OF OBTAINING SATISFACTORY INSTALLATIONS. SEE STANDARD DRAWINGS FOR PRECAST CONCRETE DRAINAGE BOX OR STRUCTURE FOR ADDITIONAL DETAILS AND SPECIFICATIONS.

19. LIFT HOLES AND/OR DEVICES MAY BE PLACED AS NECESSARY. ALL LIFT HOLES SHALL BE GROUTED SHUT PRIOR TO COMPLETION OF THE INSTALLATION. ALL LIFTING METHODS MUST MEET OSHA REGULATIONS.

20. THE CONTRACTOR SHALL USE A SINGLE SOURCE MANUFACTURER CHOSEN FROM QUALIFIED PRODUCT LIST FOR PRECAST ITEMS ON THIS DRAWING.

21. PRECAST MANUFACTURER SHALL FOLLOW QUALIFIED PRODUCT POLICY 14.

22. CONTRACTOR MAY SUBMIT DESIGN DRAWINGS AND CALCULATIONS FOR MODIFICATIONS TO THIS ITEM ON A PROJECT BY PROJECT BASIS. MODIFICATIONS TO THESE ITEMS WILL NOT BE LISTED ON ANY QUALIFIED PRODUCT LIST. SUBMIT ALL PROPOSALS FOR PROJECT SPECIFIC MODIFICATIONS TO THE RESIDENT ENGINEER FOR REVIEW BY THE ENGINEER OF RECORD.

23. JOINTS BETWEEN INSTALLED PIECES AND PRECAST ITEMS TO BE PLACED SHALL BE SEALED WITH A ½" GROUT LIFT OR AN APPROPRIATE PLASTIC PREFORMED GASKET (FROM QUALIFIED PRODUCT LIST 13.)

PRECAST INSTALLATION NOTES:

24. BED SHALL BE PREPARED AND COMPACTED FOR PRECAST DRAINAGE STRUCTURE AS REQUIRED BY SCDOT STANDARD SPECIFICATIONS FOR PRECAST ITEMS. ELEVATION OF BEDDING MATERIAL SHALL BE APPROPRIATE TO ACCOMMODATE ELEVATION OF ALL PIPES AND REQUIRED BOX TOP ELEVATION.

25. PLACE AND LEVEL PRECAST BOX.

26. PIPES SHALL BE INSTALLED AND GROUTED IN PLACE.

27. PIPES AND BOX SHALL BE BACKFILLED AND COMPACTED AS REQUIRED BY SCDOT STANDARD SPECIFICATIONS.

28. ANY LOCATION WHERE THE ABOVE REQUIREMENTS CANNOT BE MET SHALL BE COMPLETED USING CAST IN PLACE MATERIALS MEETING THE REQUIREMENTS OF THIS STANDARD DRAWING. ANY ADDITIONAL MATERIALS OR COSTS ASSOCIATED WITH THE USE OF PRECAST WILL BE PAID FOR BY THE CONTRACTOR AND MAY NOT BE CHARGED TO SCDOT.

29. PRECAST CONCRETE CIRCULAR STRUCTURES (AS SHOWN ON 719-420-00) ARE REQUIRED FOR THE FOLLOWING APPLICATIONS UNLESS PROHIBITED BY THE PLANS OR SPECIAL PROVISIONS.

(a) ON DRAINAGE STRUCTURES WITH A DEPTH EQUAL TO OR GREATER THAN 12 FEET.

(b) ON DRAINAGE STRUCTURES WHERE THE FLOW LINE ELEVATION OF THE INLET PIPE IS EQUAL TO OR HIGHER THAN THE INSIDE TOP (SOFFIT) OF THE OUTLET PIPE.

(c) AS REQUIRED BY THE PROJECT PLANS.

30. THE PAY ITEM SHALL BE:
CATCH BASIN TYPE 1 __________ EA

PRECONSTRUCTION SUPPORT ENGINEER

SOUTH CAROLINA REGISTERED PROFESSIONAL ENGINEER NO. 8858 EDWIN SYLVESTER EARGLE, II

SIGNATURE — MARCH 2, 2009 — DATE

#	DATE	CHK	DESCRIPTION
6			
5			
4			
3			
2			
1	3/2009	DSO	GENERAL REVISIONS
0	01-03-03	DSO	GENERAL REVISIONS

SCDOT — SOUTH CAROLINA DEPARTMENT OF TRANSPORTATION
DESIGN STANDARDS OFFICE
955 PARK STREET
ROOM 405
COLUMBIA, SC 29201

STANDARD DRAWING
CATCH BASIN TYPE 1 DETAILS

719-001-01
EFFECTIVE LETTING DATE MAY 2009

STANDARD DRAWING 719-009-02 — CATCH BASIN TYPE 9 & 9 MH VALLEY GUTTER INSTALLATION

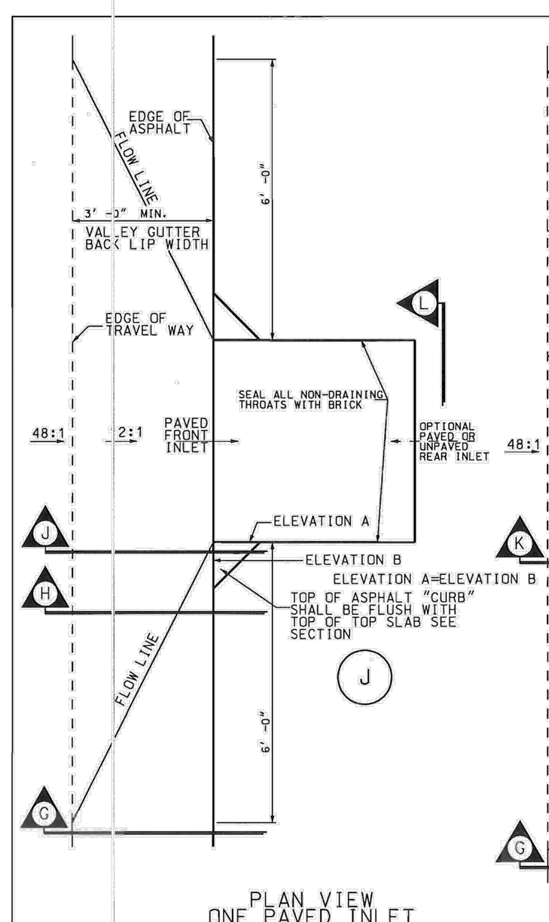

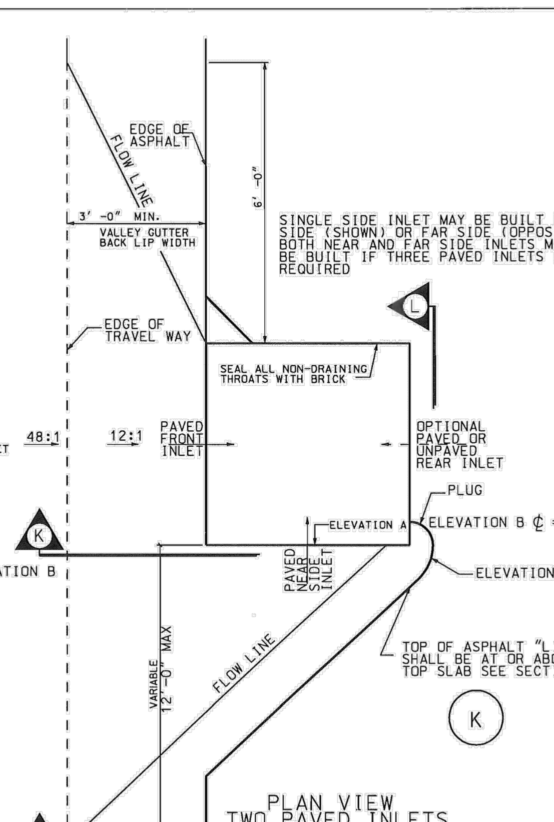

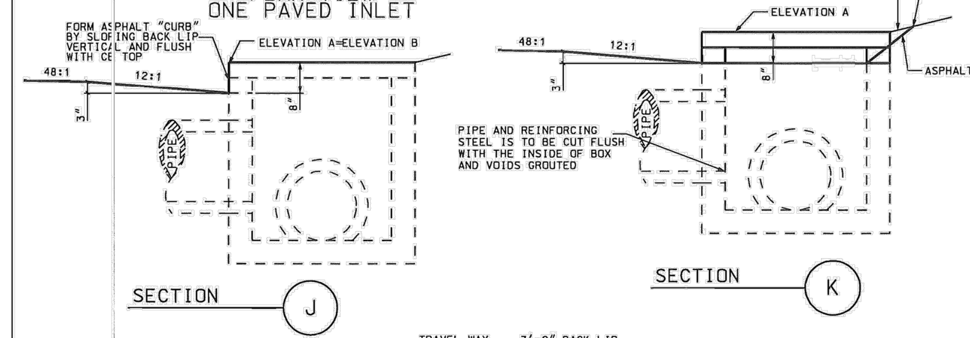

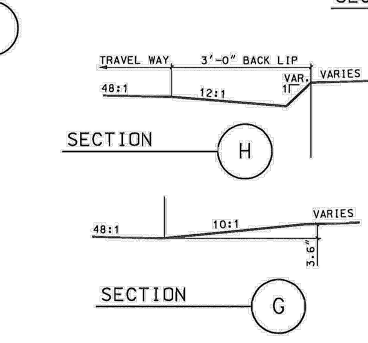

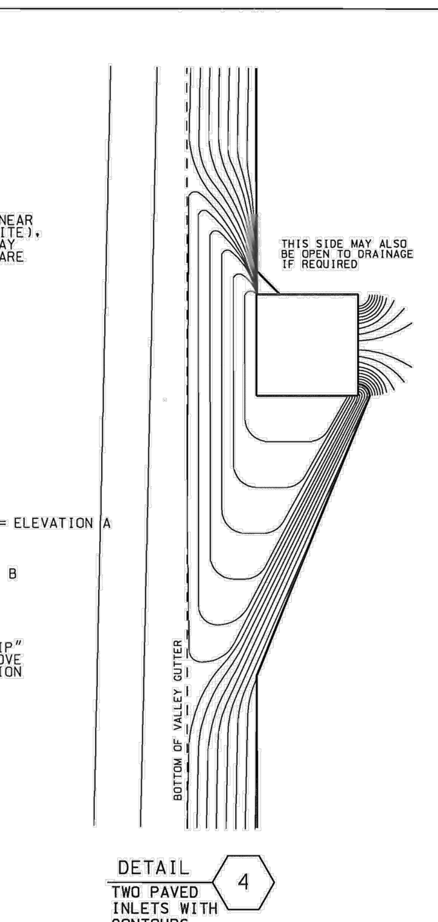

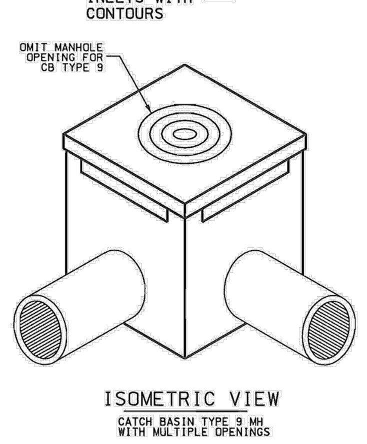

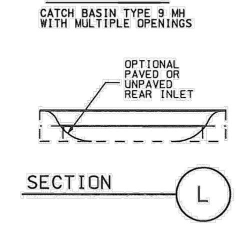

DESCRIPTION	ADA	NON ADA BICYCLE	VEHICLE
CB TYPE 9	YES-IN SIDEWALK	YES-IN SIDEWALK	NO

USE WHERE PROTECTED FROM TRAFFIC.

USE SHEETS 719-009-01 THROUGH 719-009-05 FOR THIS ITEM
THIS DRAWING IS NOT TO SCALE

GENERAL NOTES:

1. FOR BUILT IN PLACE CONSTRUCTION OF THE CATCH BASIN, EITHER BRICK MASONRY (WALLS ONLY) OR CIP CLASS 3000 CONCRETE MAY BE USED. FOR PRECAST CONSTRUCTION, A MINIMUM OF CLASS 4000P CONCRETE SHALL BE USED.

2. CONCRETE WALLS ARE TO BE 6" THICK WITH A MINIMUM REINFORCING STEEL AREA OF 0.20 SQUARE INCHES PER FOOT UNLESS NOTED. FOR BRICK, THE WALLS ARE TO BE 8" THICK. CONCRETE BRICK AND SIMILAR SOLID UNITS SHALL CONFORM TO THE REQUIREMENTS OF ASTM C 55, GRADE S-II. THE INTERIOR DIMENSIONS ARE TO REMAIN AS SHOWN FOR EITHER TYPE OF CONSTRUCTION.

3. THE BOTTOM SLAB OF THE BOX SHALL BE A MINIMUM OF 6" THICK REINFORCED CONCRETE (CLASS 3000 OR 4000P) WITH A REINFORCING STEEL AREA OF 0.20 SQUARE INCHES PER FOOT. WIRE MESH MAY BE USED IN LIEU OF STEEL BARS PROVIDED A MINIMUM OF 0.20 SQUARE INCHES PER FOOT IS MET.

4. MORTAR SHALL BE TYPE S OR M.

5. REINFORCING STEEL SHALL BE ASTM A-706, LOW-ALLOY STEEL DEFORMED BARS FOR CONCRETE REINFORCEMENT, GRADE 60. WIRE MESH SHALL CONFORM TO AASHTO M 55 AND M 221.

6. SEE STANDARD DRAWING 719-550-00 FOR METAL STEPS, WHICH ARE REQUIRED WHEN STRUCTURE DEPTH EXCEEDS 4'-6".

7. SEE STANDARD DRAWINGS 719-420-00 AND 719-425-00 FOR DEPTHS GREATER THAN 12'. PRECAST CONCRETE CIRCULAR DRAINAGE STRUCTURES ARE REQUIRED WHEN THE DEPTH FROM THE TOP OF THE DRAINAGE BOX BOTTOM SLAB TO THE TOP OF THE GROUND EXCEEDS 12'-0".

8. SEE STANDARD DRAWING 719-510-00 FOR DETAIL OF MANHOLE CASTING AND COVER. MANHOLE SHALL BE LINED UP WITH THE INTERIOR OF THE BOX AS SHOWN.

9. LOCATION AND SIZE OF PIPES ARE SITE SPECIFIC. (SEE DRAINAGE PLANS). THE BOTTOM OF THE CATCH BASIN IS TO BE GROUTED TO THE LOWEST FLOW LINE ELEVATION OF ALL PIPES. IF BOTTOM SLAB IS CAST IN PLACE WITH PIPES INSTALLED, BOTTOM SLAB THICKNESS MUST BE ACHIEVED BEYOND PIPE OUTSIDE DIAMETER.

10. THE CONTRACT UNIT PRICE FOR CATCH BASINS SHALL INCLUDE THE COST OF FURNISHING ALL MATERIALS, (BUILT IN PLACE OR PRECAST), AND WORK INCIDENTAL TO THE CONSTRUCTION OF THE STRUCTURE COMPLETE IN PLACE AS SHOWN IN ACCORDANCE WITH THE SCDOT STANDARD SPECIFICATIONS FOR HIGHWAY CONSTRUCTION (LATEST EDITION).

11. WHEN CATCH BASIN IS USED IN CONJUNCTION WITH VALLEY GUTTER SECTION THE FACE OF THE BASIN SHALL BE A MINIMUM OF 3' FROM THE GUTTER AND THE SLOPE OF THE FLUME IN FRONT OF THE BASIN SHALL BE A MAXIMUM SLOPE OF 12:1. THE COST OF THE SLOPING THE VALLEY IN FRONT OF THE BASIN SHALL BE INCLUDED IN THE PRICE BID FOR UNCLASSIFIED EXCAVATION.

12. THE NUMBER OF BOX OPENINGS SHALL BE CONSTRUCTED, AS DIRECTED BY THE RESIDENT CONSTRUCTION ENGINEER, TO FIT FIELD CONDITIONS.

13. SEE STANDARD DRAWING 719-305-00 OR 719-310-00 FOR MAXIMUM PIPE DIAMETERS. THE PIPE SIZES SHOWN ARE MAXIMUM FOR BRICK AND PRECAST BOXES WHEN PIPE ENTERS PERPENDICULAR AND AT THE CENTER OF THE BOX WALL. CONTRACTOR SHOULD CONFIRM THAT PIPE USED FITS APPROPRIATELY INTO BOX.

14. CATCH BASIN TYPE 9 MAY BE INSTALLED IN A SIDE WALK TO DRAIN GRASS SIDE IF REQUIRED. PAVE SIDEWALK AROUND THREE SIDES OF CATCH BASIN LEVEL WITH TOP SLAB WALKING SURFACE.

PRECAST NOTES:

15. THE USE OF PRECAST UNITS WILL NOT RELIEVE THE CONTRACTOR OF THE RESPONSIBILITY OF OBTAINING SATISFACTORY INSTALLATIONS. SEE STANDARD DRAWINGS FOR PRECAST CONCRETE DRAINAGE BOX OR STRUCTURE FOR ADDITIONAL DETAILS AND SPECIFICATIONS.

16. LIFT HOLES AND/OR DEVICES MAY BE PLACED AS NECESSARY. ALL LIFT HOLES SHALL BE GROUTED SHUT PRIOR TO COMPLETION OF THE INSTALLATION. ALL LIFTING METHODS MUST MEET OSHA REGULATIONS.

17. THE CONTRACTOR SHALL USE MANUFACTURERS LISTED ON QUALIFIED PRODUCT LIST 14 FOR PRECAST ITEMS ON THIS DRAWING. FOLLOW QUALIFIED PRODUCT POLICY 14 TO BE LISTED ON THE QUALIFIED PRODUCT LIST.

18. CONTRACTOR MAY SUBMIT DESIGN DRAWINGS AND CALCULATIONS FOR MODIFICATIONS TO THIS ITEM ON A PROJECT BY PROJECT BASIS. MODIFICATIONS TO THESE ITEMS WILL NOT BE LISTED ON ANY QUALIFIED PRODUCT LIST. SUBMIT ALL PROPOSALS FOR PROJECT SPECIFIC MODIFICATIONS TO THE RESIDENT ENGINEER FOR REVIEW BY THE ENGINEER OF RECORD.

19. JOINTS BETWEEN INSTALLED PIECES AND PRECAST ITEMS TO BE PLACED SHALL BE SEALED WITH A ½" GROUT LIFT OR AN APPROPRIATE PLASTIC PREFORMED GASKET (FROM APPROVAL SHEET 13.)

PRECAST INSTALLATION NOTES:

20. BED SHALL BE PREPARED AND COMPACTED FOR PRECAST DRAINAGE STRUCTURE AS REQUIRED BY SCDOT STANDARD SPECIFICATIONS FOR PRECAST ITEMS. ELEVATION OF BEDDING MATERIAL SHALL BE APPROPRIATE TO ACCOMMODATE ELEVATION OF ALL PIPES AND REQUIRED BOX TOP ELEVATION.

21. PLACE AND LEVEL PRECAST BOX.

22. PIPES SHALL BE INSTALLED AND GROUTED IN PLACE.

23. PIPES AND BOX SHALL BE BACKFILLED AND COMPACTED AS REQUIRED BY SCDOT STANDARD SPECIFICATIONS.

24. BRICK AND MORTAR SHALL BE USED TO ADJUST ELEVATIONS OF THROAT WALLS AS REQUIRED TO MEET ELEVATION AND CROSS SLOPES.

25. ANY LOCATION WHERE THE ABOVE REQUIREMENTS CANNOT BE MET SHALL BE COMPLETED USING CAST IN PLACE MATERIALS MEETING THE REQUIREMENTS OF THIS STANDARD DRAWING. ANY ADDITIONAL MATERIALS OR COSTS ASSOCIATED WITH THE USE OF PRECAST SHALL BE PAID FOR BY THE CONTRACTOR AND MAY NOT BE CHARGED TO SCDOT.

26. PRECAST CONCRETE CIRCULAR STRUCTURES (AS SHOWN ON 719-420-00) ARE REQUIRED FOR THE FOLLOWING APPLICATIONS UNLESS PROHIBITED BY THE PLANS OR SPECIAL PROVISIONS.

(a) ON DRAINAGE STRUCTURES WITH A DEPTH EQUAL TO OR GREATER THAN 12 FEET.

(b) ON DRAINAGE STRUCTURES WHERE THE FLOW LINE ELEVATION OF THE INLET PIPE IS EQUAL TO OR HIGHER THAN THE INSIDE TOP (SOFFIT) OF THE OUTLET PIPE.

(c) AS REQUIRED BY THE PROJECT PLANS.

27. THE PAY ITEMS SHALL BE:
CATCH BASIN TYPE 9 ______________ EA.
CATCH BASIN TYPE 9 MH ______________ EA.

REFERENCES
NATIONAL DOCUMENTS
ASTM C55, ASTM A706, AASHTO M55, AASHTO M221
SCDOT DOCUMENTS
QUALIFIED PRODUCT LIST 14
RELATED DRAWINGS & KEYWORDS
719-009-01 TO 719-009-05, 719-550-00, 719-420-00, 719-425-00, 719-510-00, 719-305-00, 719-310-00

PRECONSTRUCTION SUPPORT ENGINEER

SOUTH CAROLINA REGISTERED PROFESSIONAL ENGINEER NO. 8858 EDWIN SYLVESTER EARGLE, II

SIGNATURE — MARCH 3, 2008 — DATE

#	DATE	CHK	DESCRIPTION
6			
5			
4			
3			
2			
1			
0	3/2008	DSO	GENERAL REVISIONS

SCDOT — SOUTH CAROLINA DEPARTMENT OF TRANSPORTATION
DESIGN STANDARDS OFFICE
955 PARK STREET
ROOM 405
COLUMBIA, SC 29201

STANDARD DRAWING
CATCH BASIN TYPE 9 & 9 MH VALLEY GUTTER INSTALLATION

719-009-02
EFFECTIVE LETTING DATE MAY, 2008

TITLE BLOCK

SOUTH CAROLINA LICENSED PROFESSIONAL ENGINEER 10/17/16 No. 26505 CARLA MUSCARELLA — SEAL

SOUTH CAROLINA CERTIFICATE OF AUTHORIZATION WOOLPERT, INC. No. C02990 — COA

No.	DATE	REVISION
1	6/1/16	PER COUNTY REVIEW

PROJECT No: 74840
DATE 04/04/16
DES. WLPRT
DR. VT
CKD. PAS

WOOLPERT
2000 Center Point Road
Suite 2200
Columbia, SC 29210
803.731.0261
FAX: 803.731.0132

MERRIFIELD STORM WATER IMPROVEMENTS

GREENVILLE COUNTY
SOUTH CAROLINA

DETAILS

SHEET NO. **C303**

G:\IM\Projects\SC_Greenville_CO\074840_Rocky_Creek_Watershed\Merrifield\Data\CAD\Plan_Sheets\05_Merrifield_C300-C303_Details.dwg, C303, 5/31/2016 9:58:42 AM, 1:1

STANDARD DRAWING 719-016-01 — CATCH BASIN TYPE 16

SEE SHEET 719-016-02 FOR DETAILS AND NOTES

DESCRIPTION	ADA	NON ADA BICYCLE	VEHICLE
CB TYPE 16	YES	YES	YES-GUTTER LINE

USE WITH SIDEWALK/CURB & GUTTER

TABLE 719-016A		
DIMENSION LABEL	BUILT IN PLACE CONSTRUCTION	PRECAST CONSTRUCTION
A	8″	6″
B	3′-10½″	4′-0″
C	6″	6½″
D	1′-0″	1′-1½″
E	¾″	SEE 4x4 PC BOX
F	2′-4¾″	2′-5½″

CONTRACTOR MAY USE A COMBINATION OF BUILT IN PLACE AND PRECAST COMPONENTS AS APPROVED BY THE RESIDENT

SEE QUALIFIED PRODUCT LIST 14 FOR MANUFACTURERS OF PRECAST ITEMS.

BUILT IN PLACE	(1) CB 16 BOTTOM SLAB (PC OR CIP CONCRETE 64″X64″X6″) AND (2) BRICK WALLS (8″) (MAXIMUM 12′ DEPTH) AND (3) PC CB 16 TOP SLAB (66″X64″X8″)
PRECAST	(4) PC DRAINAGE BOX CONFORMING TO 719-305-00 OR 719-310-00 (4′X4′X__) (MAX 12′ DEPTH) AND (5) CB 16 TOP SLAB WITH THROAT WALLS (66″X64″X14″)

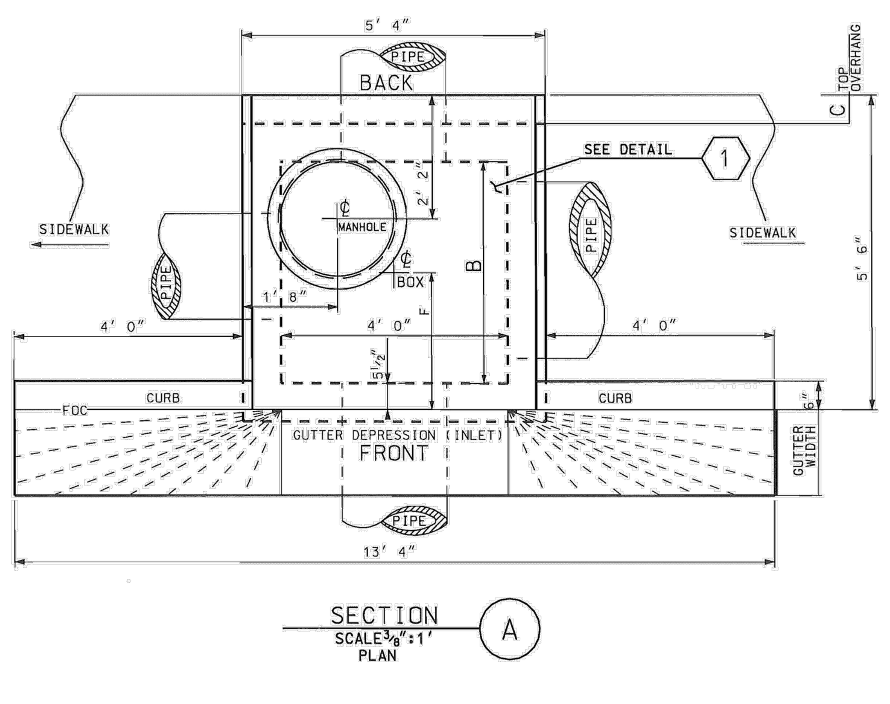

SECTION A
SCALE ⅜″:1′
PLAN

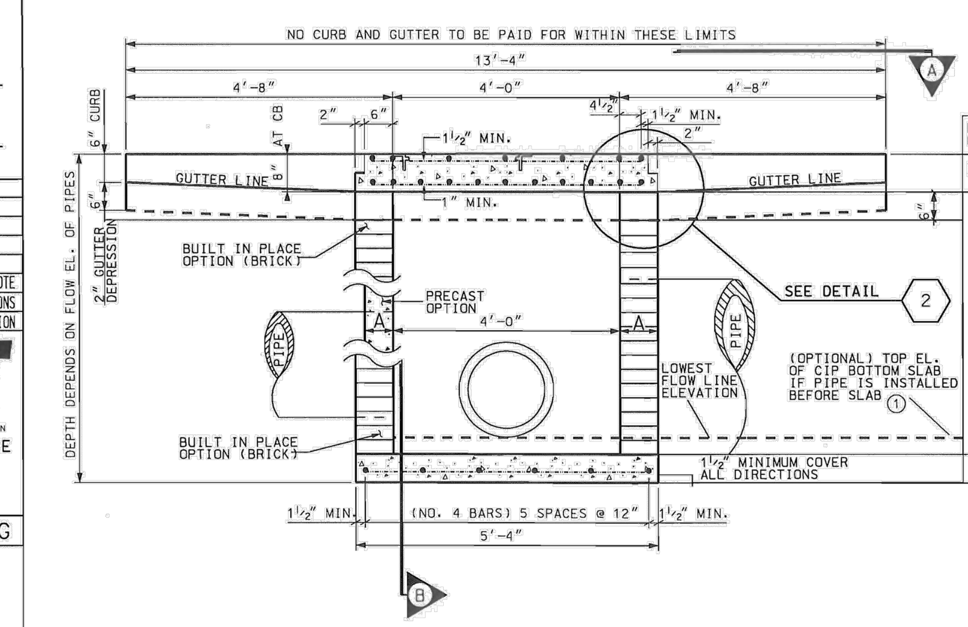

BUILT IN PLACE CONSTR.	PRECAST OPTION
CB 16 TOP SLAB (3)	CB 16 TOP SLAB W/ THROAT WALLS (5)
BRICK (2)	PC BOX (4)
CB 16 BOT. SLAB (1)	

SECTION B
SCALE ⅜″:1′
FRONT ELEVATION
CATCH BASIN TYPE 17

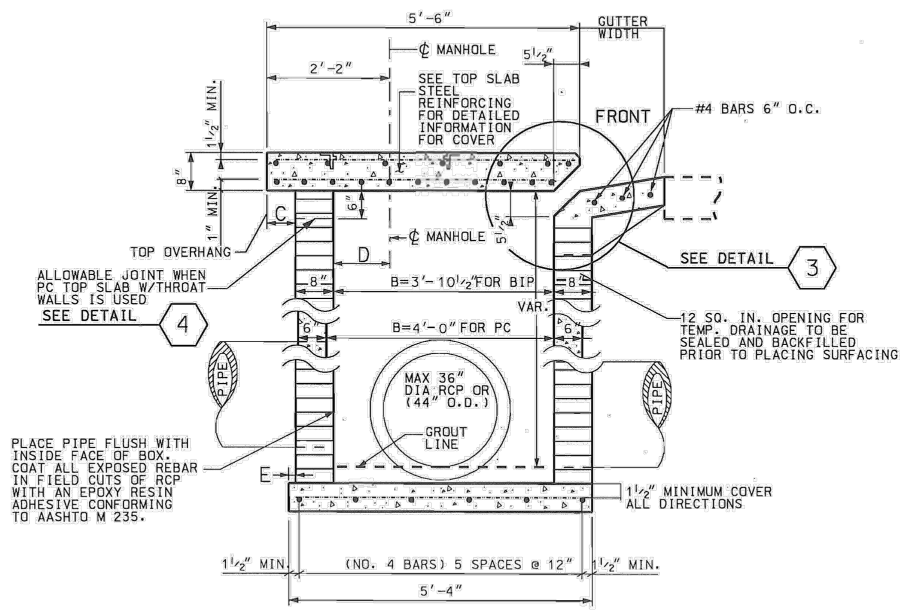

SECTION C
SCALE ⅜″:1′
SIDE ELEV.

REFERENCES
NATIONAL DOCUMENTS: AASHTO M235
SCDOT DOCUMENTS: QUALIFIED PRODUCT LIST 14
RELATED DRAWINGS & KEYWORD: 719-305-00, 719-310-00, 719-016-02

PRECONSTRUCTION SUPPORT ENGINEER
SOUTH CAROLINA REGISTERED PROFESSIONAL ENGINEER NO. 8858 EDWIN SYLVESTER EARGLE, II
SIGNATURE
MARCH 2, 2009
DATE

#	DATE	CHK	DESCRIPTION
6			
5			
4			
3			
2			
1	3/2009	SDM	TEMP OPENING NOTE
0	3/2008	DSO	GENERAL REVISIONS

SCDOT
SOUTH CAROLINA DEPARTMENT OF TRANSPORTATION
DESIGN STANDARDS OFFICE
955 PARK STREET
ROOM 405
COLUMBIA, SC 29201

STANDARD DRAWING
CATCH BASIN TYPE 16
719-016-01
EFFECTIVE LETTING DATE MARCH, 2009

STANDARD DRAWING 719-017-01 — CATCH BASIN TYPE 17

TABLE 719-017A		
DIMENSION LABEL	BUILT IN PLACE CONSTRUCTION	PRECAST CONSTRUCTION
A	8″	6″
B	3′-10½″	4′-0″
C	6″	6½″
D	1′-0″	1′-1½″
E	¾″	SEE 4X4 PC BOX
F	2′-4¾″	2′-5½″

DESCRIPTION	ADA	NON ADA BICYCLE	VEHICLE
CB TYPE 17	YES	YES	YES-GUTTER LINE

USE WITH SIDEWALK/CURB & GUTTER

CONTRACTOR MAY USE A COMBINATION OF BUILT IN PLACE AND PRECAST COMPONENTS AS APPROVED BY THE RESIDENT.

SEE QUALIFIED PRODUCT LIST 14 FOR MANUFACTURERS OF PRECAST ITEMS.

BUILT IN PLACE	(1) BOTTOM SLAB (PC OR CIP CONCRETE 64″x64″x6″) AND (2) BRICK WALLS (8″) (MAX 12′ DEPTH) AND (3) PC CB 17 TOP SLAB (66″x112″x8″) AND (4) THROAT (BUILT-IN-PLACE)
PRECAST	(3) PC CB 17 TOP SLAB 66″x112″x8″ AND (5) PC CB 17 THROAT AND (6) PC DRAINAGE BOX CONFORMING TO 719-305-00 OR 719-310-00 (4′x4′x__)

THROAT WILL BE RIGHT (AS SHOWN) OR LEFT (OPPOSITE HAND) DEPENDING ON LOCATION OF CB 17

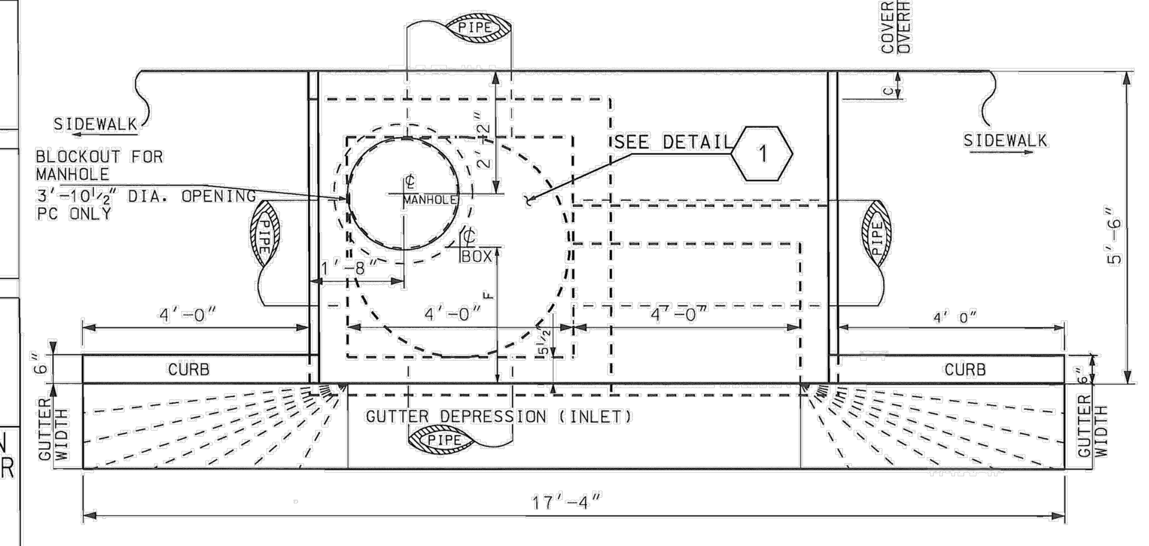

SECTION A
SCALE ⅜″:1′
PLAN

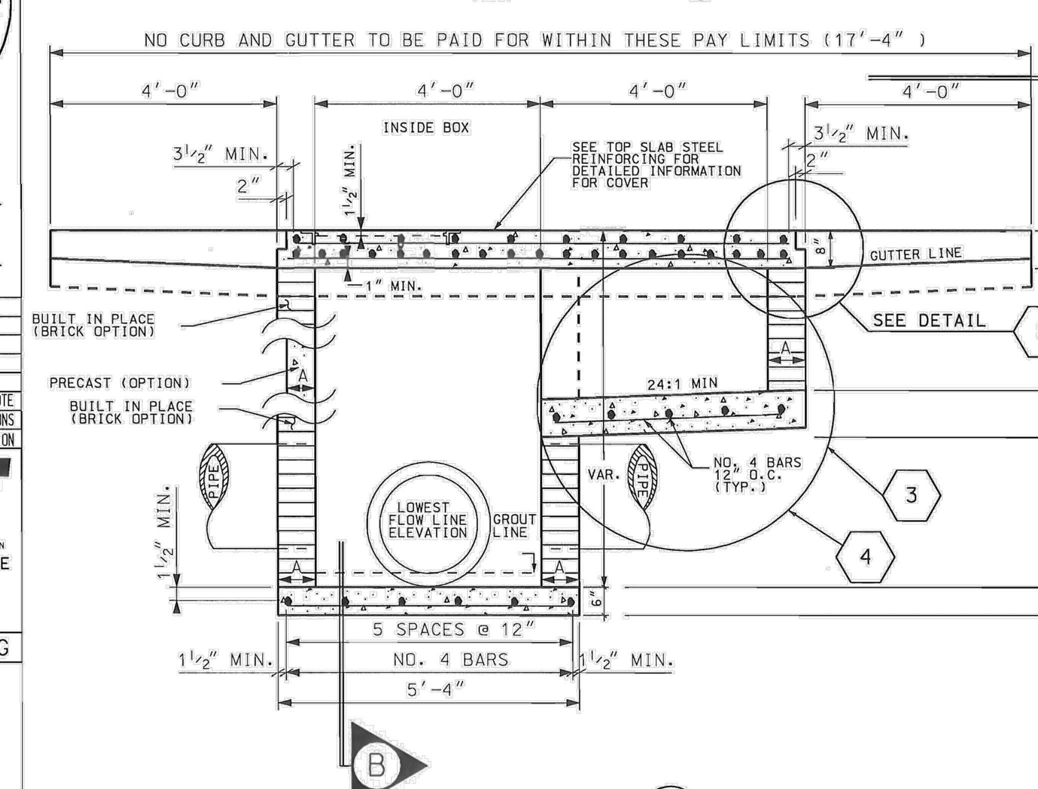

BUILT IN PLACE CONSTRUCTION	PRECAST OPTION
CB 17 TOP SLAB (3)	CB 17 TOP SLAB (3)
BRICK (4)	CB 17 THROAT (5) SEE DETAIL 3
CAST-IN-PLACE CONCRETE REFER TO DETAIL 4	
BRICK (2)	PC BOX (6)
CB 17 BOT. SLAB (1)	

SECTION B
SCALE ⅜″:1′
FRONT ELEVATION
CATCH BASIN TYPE 17

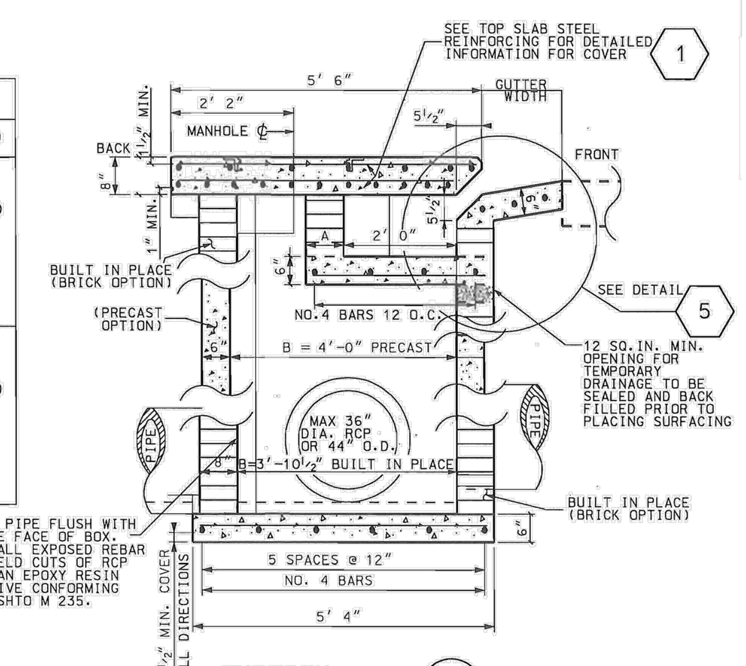

SECTION C
SCALE ⅜″:1′
SIDE ELEVATION
CATCH BASIN TYPE 17

REFERENCES
NATIONAL DOCUMENTS: AASHTO M 235
SCDOT DOCUMENTS: QUALIFIED PRODUCT LIST 14
RELATED DRAWINGS & KEYWORDS: 719-017-01 TO 719-017-02, 719-305-00, 719-310-00

PRECONSTRUCTION SUPPORT ENGINEER
SOUTH CAROLINA REGISTERED PROFESSIONAL ENGINEER NO. 8858 EDWIN SYLVESTER EARGLE, II
SIGNATURE
MARCH 2, 2009
DATE

#	DATE	CHK	DESCRIPTION
6			
5			
4			
3			
2			
1	3/2009	SDM	TEMP OPENING NOTE
0	3/2008	DSO	GENERAL REVISIONS

SCDOT
SOUTH CAROLINA DEPARTMENT OF TRANSPORTATION
DESIGN STANDARDS OFFICE
955 PARK STREET
ROOM 405
COLUMBIA, SC 29201

STANDARD DRAWING
CATCH BASIN TYPE 17
719-017-01
EFFECTIVE LETTING DATE MAY 2009

STANDARD DRAWING 719-016-02 — CATCH BASIN TYPE 16

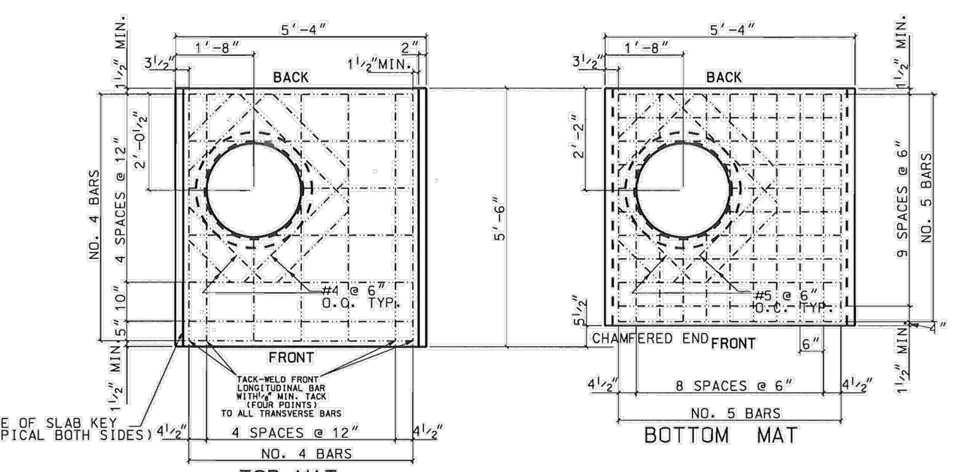

DETAIL 1
TOP SLAB STEEL REINFORCING

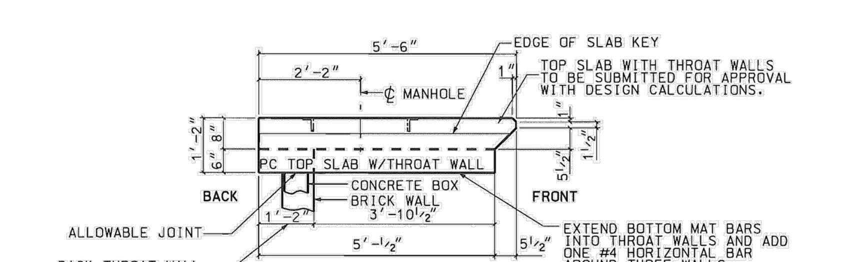

DETAIL 4
PC TOP SLAB W/ THROAT WALLS

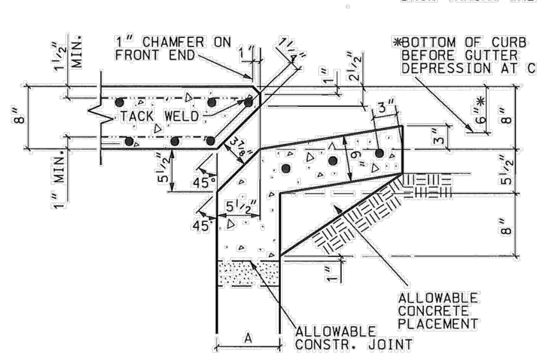

DETAIL 3
CB INLET

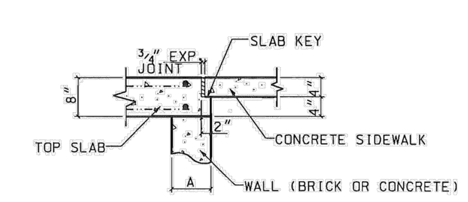

DETAIL 2
SLAB KEY

GENERAL NOTES:

1. FOR BUILT IN PLACE CONSTRUCTION OF THE CATCH BASIN, EITHER BRICK MASONRY (WALLS ONLY) OR CIP CLASS 3000 CONCRETE MAY BE USED. FOR PRECAST CONSTRUCTION, A MINIMUM OF CLASS 4000P CONCRETE SHALL BE USED.

2. CONCRETE WALLS ARE TO BE 6″ THICK WITH A MINIMUM REINFORCING STEEL AREA OF 0.20 SQUARE INCHES PER FOOT UNLESS NOTED. FOR BRICK, THE WALLS ARE TO BE 8″ THICK. CONCRETE BRICK AND SIMILAR SOLID UNITS SHALL CONFORM TO THE REQUIREMENTS OF ASTM C 55, GRADE S-II. THE INTERIOR DIMENSIONS ARE TO REMAIN AS SHOWN FOR EITHER TYPE OF CONSTRUCTION.

3. THE BOTTOM SLAB OF THE BOX SHALL BE A MINIMUM OF 6″ THICK REINFORCED CONCRETE (CLASS 3000 OR 4000P) WITH A REINFORCING STEEL AREA OF 0.20 SQUARE INCHES PER FOOT. WIRE MESH MAY BE USED IN LIEU OF STEEL BARS PROVIDED A MINIMUM OF 0.20 SQUARE INCHES PER FOOT IS MET.

4. MORTAR SHALL BE TYPE S OR M.

5. REINFORCING STEEL SHALL BE ASTM A-706, LOW-ALLOY STEEL DEFORMED BARS FOR CONCRETE REINFORCEMENT, GRADE 60. WIRE MESH SHALL CONFORM TO AASHTO M 55 AND M 221.

6. SEE STANDARD DRAWING 719-550-00 FOR STEPS, WHICH ARE REQUIRED WHEN STRUCTURE DEPTH EXCEEDS 4′-6″.

7. SEE STANDARD DRAWINGS 719-420-00 AND 719-425-00 FOR DEPTHS GREATER THAN 12′. PRECAST CONCRETE CIRCULAR DRAINAGE STRUCTURES ARE REQUIRED WHEN THE DEPTH FROM THE TOP OF THE DRAINAGE BOX BOTTOM SLAB TO THE TOP OF THE GROUND EXCEEDS 12′-0″.

8. SEE STANDARD DRAWING 719-510-00 FOR DETAIL OF MANHOLE CASTING AND COVER. MANHOLE SHALL BE LINED UP WITH THE INTERIOR OF THE BOX AS SHOWN.

9. LOCATION AND SIZE OF PIPES ARE SITE SPECIFIC, (SEE DRAINAGE PLANS). THE BOTTOM OF THE CATCH BASIN IS TO BE GROUTED TO THE LOWEST FLOW LINE ELEVATION OF ALL PIPES. IF BOTTOM SLAB IS CAST IN PLACE WITH PIPES INSTALLED, BOTTOM SLAB THICKNESS MUST BE ACHIEVED BEYOND PIPE OUTSIDE DIAMETER.

10. THE CONTRACT UNIT PRICE FOR CATCH BASINS SHALL INCLUDE THE COST OF FURNISHING ALL MATERIALS, (BUILT IN PLACE OR PRECAST), AND WORK INCIDENTAL TO THE CONSTRUCTION OF THE STRUCTURE COMPLETE IN PLACE AS SHOWN, INCLUDING THE CURB AND GUTTER, IN ACCORDANCE WITH THE SCDOT STANDARD SPECIFICATIONS FOR HIGHWAY CONSTRUCTION (LATEST EDITION).

11. SPECIAL ATTENTION SHOULD BE GIVEN TO THE COMPACTION OF THE SOIL UNDER THE 6″ OR 6½″ COVER OVERHANG ON THE BACK OF THE CATCH BASIN, AND UNDER ANY OPTIONAL PRECAST ITEMS USED.

12. THE SLOPE ON TOP OF CATCH BASIN IS TO MATCH ADJACENT SIDEWALK OR 50:1 TOWARD ROADWAY WHERE NO SIDEWALK IS PRESENT.

13. WHEN IT IS NECESSARY TO PLACE A CATCH BASIN IN A RADIUS, THE FACE OF THE CATCH BASIN TOP SHALL CONFORM TO THE HORIZONTAL CURVATURE OF THE ADJACENT CURB WHEN THE RADIUS IS 100 FEET OR LESS. OTHERWISE, THE TOP SHALL BE RECTANGULAR WITH SQUARE CORNERS. IN ALL CASES, THE BACK OF THE CATCH BASIN TOP SHOULD FOLLOW THE SAME ALIGNMENT A ITS FACE.

14. SEE STANDARD DRAWING 719-310-00 OR 719-305-00 FOR MAXIMUM PIPE DIAMETERS. THE PIPE SIZES SHOWN ARE MAXIMUM FOR BRICK AND PRECAST BOXES WHEN PIPE ENTERS PERPENDICULAR AND AT THE CENTER OF THE BOX WALL. CONTRACTOR SHOULD CONFIRM THAT PIPE USED FITS APPROPRIATELY INTO BOX.

PRECAST NOTES:

15. SUPPLY PRECAST CONCRETE COMPONENTS FOR DRAINAGE ITEMS AT EACH LOCATION FROM A SINGLE SOURCE PRECAST MANUFACTURER THAT HAS BEEN INSPECTED AND APPROVED BY THE MATERIALS AND RESEARCH ENGINEER. SUPPLY ALL INTERCHANGEABLE PRECAST PARTS ON ENTIRE PROJECT FROM A SINGLE SOURCE MANUFACTURER LISTED ON QUALIFIED PRODUCT LIST 14 UNLESS APPROVED BY RCE. ITEMS FROM MULTIPLE MANUFACTURERS SHOULD NOT BE INSTALLED IN INDIVIDUAL LOCATIONS.

16. THE USE OF PRECAST UNITS WILL NOT RELIEVE THE CONTRACTOR OF THE RESPONSIBILITY OF OBTAINING SATISFACTORY INSTALLATIONS. SEE STANDARD DRAWINGS FOR PRECAST CONCRETE DRAINAGE BOX OR STRUCTURE FOR ADDITIONAL DETAILS AND SPECIFICATIONS.

17. LIFT HOLES AND/OR DEVICES MAY BE PLACED AS NECESSARY. ALL LIFT HOLES SHALL BE GROUTED SHUT PRIOR TO COMPLETION OF THE INSTALLATION. ALL LIFTING METHODS MUST MEET OSHA REGULATIONS.

18. PRECAST TOP SLAB TO BE MANUFACTURED WITH 1″ CHAMFER OR RADIUS ON TOP OF FRONT END IN ORDER TO MORE CLOSELY MATCH TOP OF CURB RADIUS.

19. IF PRECAST THROAT IS USED, THE THROAT OPENING SHALL NOT OBSTRUCT THE MANHOLE OPENING.

20. THE CONTRACTOR SHALL USE A SINGLE SOURCE MANUFACTURER CHOSEN FROM THE LIST ON QUALIFIED PRODUCT LIST 14 FOR PRECAST ITEMS ON THIS DRAWING.

21. PRECAST MANUFACTURER SHALL FOLLOW QUALIFIED PRODUCT POLICY 14 BEFORE SUPPLYING THIS ITEM ON SCDOT PROJECTS.

22. CONTRACTOR MAY SUBMIT DESIGN DRAWINGS AND CALCULATIONS FOR MODIFICATIONS TO THIS ITEM ON A PROJECT BY PROJECT BASIS. MODIFICATIONS TO THESE ITEMS WILL NOT BE LISTED ON ANY QUALIFIED PRODUCT LIST. SUBMIT ALL PROPOSALS FOR PROJECT SPECIFIC MODIFICATIONS TO THE RESIDENT ENGINEER FOR REVIEW BY THE ENGINEER OF RECORD.

23. JOINTS BETWEEN INSTALLED PIECES AND PRECAST ITEMS TO BE PLACED SHALL BE SEALED WITH A ½″ GROUT LIFT OR AN APPROPRIATE PLASTIC PREFORMED GASKET (FROM QUALIFIED PRODUCT LIST 14.)

24. TOP SLAB MUST BE IN LINE WITH BOTH THE ROAD SLOPE (SHOW ON ROAD PLANS)AND THE SIDEWALK SLOPE(TYPICALLY 50:1).

25. PRECAST CONCRETE CIRCULAR STRUCTURES (AS SHOWN ON 719-420-00) ARE REQUIRED FOR THE FOLLOWING APPLICATIONS UNLESS PROHIBITED BY THE PLANS OR SPECIAL PROVISIONS.

(a) ON DRAINAGE STRUCTURES WITH A DEPTH EQUAL TO OR GREATER THAN 12 FEET.

(b) ON DRAINAGE STRUCTURES WHERE THE FLOW LINE ELEVATION OF THE INLET PIPE IS EQUAL TO OR HIGHER THAN THE INSIDE TOP (SOFFIT) OF THE OUTLET PIPE.

(c) AS REQUIRED BY THE PROJECT PLANS.

TABLE 719-016B
STANDARD PC ITEMS CB 16
CB 16 BOTTOM SLAB (64″ X 64″ X 6″)
CB 16 TOP SLAB (66″ X 64″ X 8″)
CB 16 TOP SLAB WITH THROAT WALLS (66″ X 64″ X 14″)
SEE ALSO 719-305-00 AND 719-310-00

USE SHEETS 719-016-01 THROUGH 719-016-02 FOR THIS ITEM.

THIS DRAWING IS NOT TO SCALE

REFERENCES
NATIONAL DOCUMENTS: ASTM C55, ASTM A706, AASHTO M55, AASHTO M221
SCDOT DOCUMENTS: QUALIFIED PRODUCT LIST 14
RELATED DRAWINGS & KEYWORDS: 719-016-01 TO 719-016-02, 719-550-00, 719-420-00, 719-425-00, 719-510-00, 719-310-00, 719-305-00

PRECONSTRUCTION SUPPORT ENGINEER
SOUTH CAROLINA REGISTERED PROFESSIONAL ENGINEER NO. 8858 EDWIN SYLVESTER EARGLE, II
SIGNATURE
MARCH 3, 2008
DATE

#	DATE	CHK	DESCRIPTION
6			
5			
4			
3			
2			
1			
0	3/2008	DSO	GENERAL REVISIONS

SCDOT
SOUTH CAROLINA DEPARTMENT OF TRANSPORTATION
DESIGN STANDARDS OFFICE
955 PARK STREET
ROOM 405
COLUMBIA, SC 29201

STANDARD DRAWING
CATCH BASIN TYPE 16
719-016-02
EFFECTIVE LETTING DATE MAY 2008

STANDARD DRAWING 719-017-02 — CATCH BASIN TYPE 17

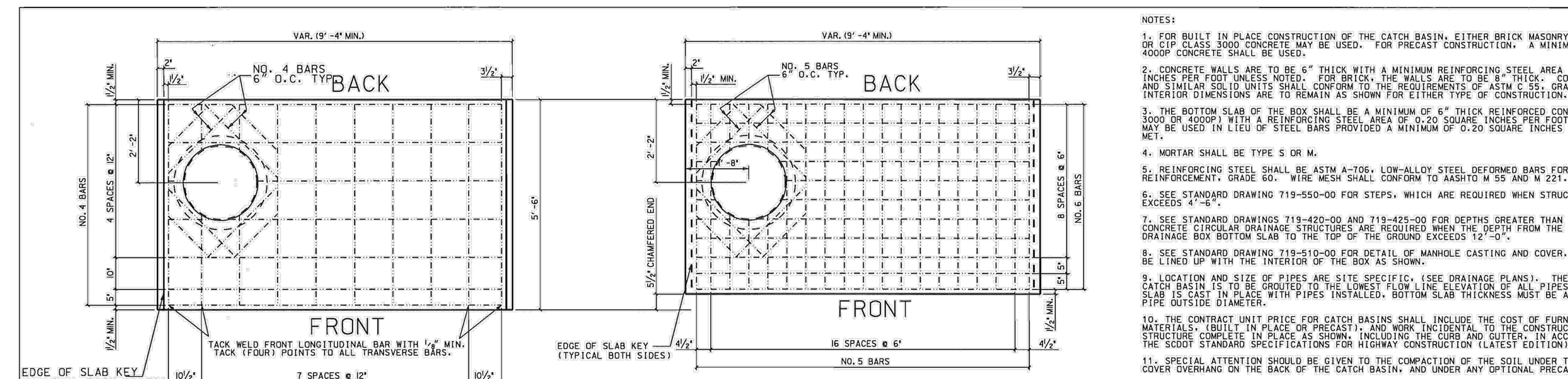

DETAIL 1
TOP SLAB STEEL REINFORCING

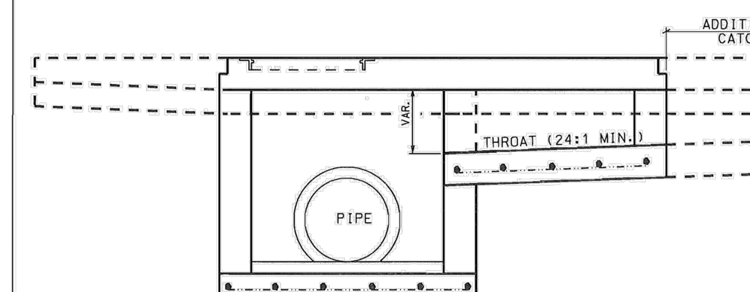

DETAIL 6
ADDITIONAL LENGTH CB

THROAT LENGTH MAY VARY FROM THE NORMAL 4′ UP TO 20′, BUT MUST BE BY FOOT INCREMENTS TO THE SIDE. CONTINUE THE REINFORCING STEEL LAYOUT THE SAME AS ORIGINAL LAYOUT. THROAT SLOPE SHALL BE NO FLATTER THAN 24:1. ADDITIONAL LENGTH THROAT SHALL BE BUILT IN PLACE CONSTRUCTION ONLY. THE COST OF ADDITIONAL LENGTH CATCH BASIN WILL BE A SEPARATE PAY ITEM.

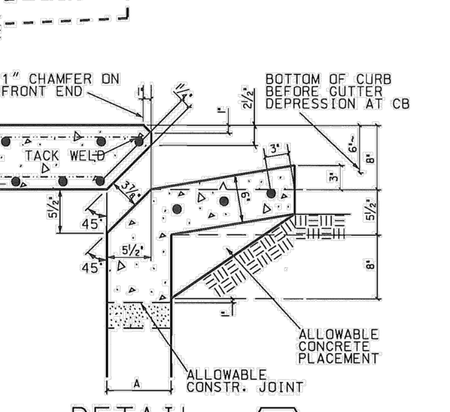

DETAIL 5
CB INLET

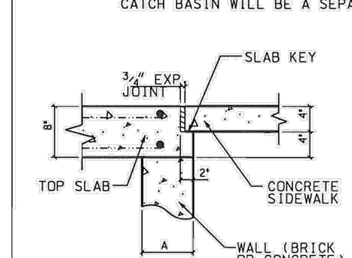

DETAIL 2
SLAB KEY

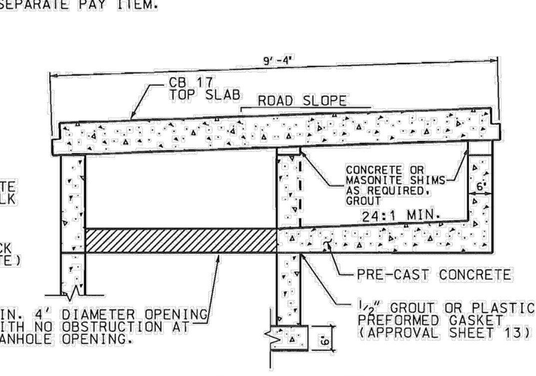

DETAIL 3
PRECAST CB THROAT

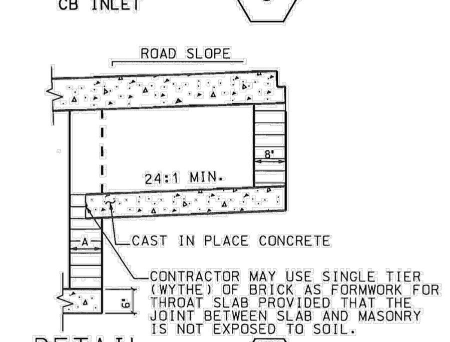

DETAIL 4
CAST-IN-PLACE CB THROAT

TABLE 719-017B STANDARD PC ITEMS CB 17
CB 17 BOTTOM SLAB (64″ X 64″ X 6″)
CB 17 TOP SLAB (66″ X 112″ X 8″)
CB 17 THROAT
SEE ALSO 719-310-00 AND 719-305-00

PRECAST MANUFACTURERS SHALL SUBMIT CERTIFICATION OF COMPLIANCE TO BE LISTED ON APPROVAL SHEET 14 FOR ITEMS LISTED ON THIS SHEET ONLY. APPROVAL PROCESS FOR REFERENCED ITEMS IS LISTED ON THE CORRESPONDING STANDARD SHEET FOR THAT ITEM.

USE SHEETS 719-017-01 THROUGH 719-017-02 FOR THIS ITEM.

THIS DRAWING IS NOT TO SCALE

NOTES:

1. FOR BUILT IN PLACE CONSTRUCTION OF THE CATCH BASIN, EITHER BRICK MASONRY (WALLS ONLY) OR CIP CLASS 3000 CONCRETE MAY BE USED. FOR PRECAST CONSTRUCTION, A MINIMUM OF CLASS 4000P CONCRETE SHALL BE USED.

2. CONCRETE WALLS ARE TO BE 6″ THICK WITH A MINIMUM REINFORCING STEEL AREA OF 0.20 SQUARE INCHES PER FOOT UNLESS NOTED. FOR BRICK, THE WALLS ARE TO BE 8″ THICK. CONCRETE BRICK AND SIMILAR SOLID UNITS SHALL CONFORM TO THE REQUIREMENTS OF ASTM C 55, GRADE S-II. THE INTERIOR DIMENSIONS ARE TO REMAIN AS SHOWN FOR EITHER TYPE OF CONSTRUCTION.

3. THE BOTTOM SLAB OF THE BOX SHALL BE A MINIMUM OF 6″ THICK REINFORCED CONCRETE (CLASS 3000 OR 4000P) WITH A REINFORCING STEEL AREA OF 0.20 SQUARE INCHES PER FOOT. WIRE MESH MAY BE USED IN LIEU OF STEEL BARS PROVIDED A MINIMUM OF 0.20 SQUARE INCHES PER FOOT IS MET.

4. MORTAR SHALL BE TYPE S OR M.

5. REINFORCING STEEL SHALL BE ASTM A-706, LOW-ALLOY STEEL DEFORMED BARS FOR CONCRETE REINFORCEMENT, GRADE 60. WIRE MESH SHALL CONFORM TO AASHTO M 55 AND M 221.

6. SEE STANDARD DRAWING 719-550-00 FOR STEPS, WHICH ARE REQUIRED WHEN STRUCTURE DEPTH EXCEEDS 4′-6″.

7. SEE STANDARD DRAWINGS 719-420-00 AND 719-425-00 FOR DEPTHS GREATER THAN 12′. PRECAST CONCRETE CIRCULAR DRAINAGE STRUCTURES ARE REQUIRED WHEN THE DEPTH FROM THE TOP OF THE DRAINAGE BOX BOTTOM SLAB TO THE TOP OF THE GROUND EXCEEDS 12′-0″.

8. SEE STANDARD DRAWING 719-510-00 FOR DETAIL OF MANHOLE CASTING AND COVER. MANHOLE SHALL BE LINED UP WITH THE INTERIOR OF THE BOX AS SHOWN.

9. LOCATION AND SIZE OF PIPES ARE SITE SPECIFIC, (SEE DRAINAGE PLANS). THE BOTTOM OF THE CATCH BASIN IS TO BE GROUTED TO THE LOWEST FLOW LINE ELEVATION OF ALL PIPES. IF BOTTOM SLAB IS CAST IN PLACE WITH PIPES INSTALLED, BOTTOM SLAB THICKNESS MUST BE ACHIEVED BEYOND PIPE OUTSIDE DIAMETER.

10. THE CONTRACT UNIT PRICE FOR CATCH BASINS SHALL INCLUDE THE COST OF FURNISHING ALL MATERIALS, (BUILT IN PLACE OR PRECAST), AND WORK INCIDENTAL TO THE CONSTRUCTION OF THE STRUCTURE COMPLETE IN PLACE AS SHOWN, INCLUDING THE CURB AND GUTTER, IN ACCORDANCE WITH THE SCDOT STANDARD SPECIFICATIONS FOR HIGHWAY CONSTRUCTION (LATEST EDITION).

11. SPECIAL ATTENTION SHOULD BE GIVEN TO THE COMPACTION OF THE SOIL UNDER THE 6″ OR 6½″ COVER OVERHANG ON THE BACK OF THE CATCH BASIN, AND UNDER ANY OPTIONAL PRECAST ITEMS USED.

12. THE SLOPE ON TOP OF CATCH BASIN IS TO MATCH ADJACENT SIDEWALK OR 50:1 TOWARD ROADWAY WHERE NO SIDEWALK IS PRESENT.

13. WHEN IT IS NECESSARY TO PLACE A CATCH BASIN IN A RADIUS, THE FACE OF THE CATCH BASIN TOP SHALL CONFORM TO THE HORIZONTAL CURVATURE OF THE ADJACENT CURB WHEN THE RADIUS IS 250 FEET OR LESS. OTHERWISE, THE TOP SHALL BE RECTANGULAR WITH SQUARE CORNERS. IN ALL CASES, THE BACK OF THE CATCH BASIN TOP SHOULD FOLLOW THE SAME ALIGNMENT AS ITS FACE.

14. SEE STANDARD DRAWING 719-305-00 OR 719-310-00 FOR MAXIMUM PIPE DIAMETERS. THE PIPE SIZES SHOWN ARE MAXIMUM FOR BRICK AND PRECAST BOXES WHEN PIPE ENTERS PERPENDICULAR AND AT THE CENTER OF THE BOX WALL. CONTRACTOR SHOULD CONFIRM THAT PIPE USED FITS APPROPRIATELY INTO BOX.

PRECAST NOTES:

15. SUPPLY PRECAST CONCRETE COMPONENTS FOR DRAINAGE ITEMS AT EACH LOCATION FROM A SINGLE SOURCE PRECAST MANUFACTURER THAT HAS BEEN INSPECTED AND APPROVED BY THE MATERIALS AND RESEARCH ENGINEER. SUPPLY ALL INTERCHANGEABLE PRECAST PARTS ON ENTIRE PROJECT FROM A SINGLE SOURCE MANUFACTURER LISTED ON QUALIFIED PRODUCT LIST 14 UNLESS APPROVED BY RCE. ITEMS FROM MULTIPLE MANUFACTURERS SHOULD NOT BE INSTALLED IN INDIVIDUAL LOCATIONS.

16. THE USE OF PRECAST UNITS WILL NOT BELIEVE THE CONTRACTOR OF THE RESPONSIBILITY OF OBTAINING SATISFACTORY INSTALLATIONS. SEE STANDARD DRAWINGSFOR PRECAST CONCRETE DRAINAGE BOX OR STRUCTURE FOR ADDITIONAL DETAILS AND SPECIFICATIONS.

17. LIFT HOLES AND/OR DEVICES MAY BE PLACED AS NECESSARY. ALL LIFT HOLES SHALL BE GROUTED SHUT PRIOR TO COMPLETION OF THE INSTALLATION. ALL LIFTING METHODS MUST MEET OSHA REGULATIONS.

18. PRECAST TOP SLAB TO BE MANUFACTURED WITH 1″ CHAMFER OR RADIUS ON TOP OF FRONT END IN ORDER TO MORE CLOSELY MATCH TOP OF CURB RADIUS.

19. IF PRECAST THROAT IS USED, THE THROAT OPENING SHALL NOT OBSTRUCT THE MANHOLE OPENING.

20. THE CONTRACTOR SHALL USE A SINGLE SOURCE MANUFACTURER CHOSEN FROM THE LIST ON QUALIFIED PRODUCT LIST 14 FOR ITEMS ON THIS DRAWING.

21. PRECAST MANUFACTURER SHALL FOLLOW QUALIFIED PRODUCT POLICY 14.

22.CONTRACTOR MAY SUBMIT DESIGN DRAWINGS AND CALCULATIONS FOR MODIFICATIONS TO THIS ITEM ON A PROJECT BY PROJECT BASIS. MODIFICATIONS TO THESE ITEMS WILL NOT BE LISTED ON ANY QUALIFIED PRODUCT LIST. SUBMIT ALL PROPOSALS FOR PROJECT SPECIFIC MODIFICATIONS TO THE RESIDENT ENGINEER FOR REVIEW BY THE ENGINEER OF RECORD.

23. JOINTS BETWEEN INSTALLED PIECES AND PRECAST ITEMS TO BE PLACED SHALL BE SEALED WITH A ½″ GROUT LIFT OR AN APPROPRIATE PLASTIC PREFORMED GASKET (FROM QUALIFIED PRODUCT LIST 14.)

24. TOP SLAB MUST BE IN LINE WITH BOTH THE ROAD SLOPE (SHOW ON ROAD PLANS) AND THE SIDEWALK SLOPE (TYPICALLY 50:1).

PRECAST INSTALLATION NOTES:

25. BED SHALL BE PREPARED AND COMPACTED FOR PRECAST DRAINAGE STRUCTURE AS REQUIRED BY SCDOT STANDARD SPECIFICATIONS FOR PRECAST ITEMS. ELEVATION OF BEDDING MATERIAL SHALL BE APPROPRIATE TO ACCOMODATE ELEVATION OF ALL PIPES AND REQUIRED BOX TOP ELEVATION.

26. PLACE AND LEVEL PRECAST BOX.

27. PIPES SHALL BE INSTALLED AND GROUTED IN PLACE.

28. PIPES AND BOX SHALL BE BACKFILLED AND COMPACTED AS REQUIRED BY SCDOT STANDARD SPECIFICATIONS.

29. BED SHALL BE PREPARED AND COMPACTED FOR PRECAST THROAT AS REQUIRED BY SCDOT STANDARD SPECIFICATIONS FOR PRECAST ITEMS.

30. PRECAST THROAT SHALL BE PLACED ON BOX. JOINT SEAL SHALL BE PLACED BETWEEN THE BOX AND THE PRECAST THROAT. PRECAST THROAT WALL DIMENSIONS SHALL MATCH DIMENSIONS OF BOX WALLS IN AREAS OF CONTACT.

31. BACKFILL TO APPROXIMATE TOP OF THROAT WITH SELECT MATERIAL. ADJUST FILL AND BED LEVEL TO MATCH ELEVATION AND CROSS SLOPES.

32. BRICK AND MORTAR SHALL BE USED TO ADJUST ELEVATIONS OF THROAT WALLS AS REQUIRED TO MEET ELEVATION AND CROSS SLOPES.

33. PRECAST TOP SLAB SHALL BE PLACED ON THROAT. JOINT SEAL SHALL BE PLACED BETWEEN THE THROAT TOP AND THE PRECAST SLAB. SLAB ELEVATION, CROSS SLOPE, AND ALIGNMENT SHALL MATCH CAST IN PLACE SIDEWALK DIMENSIONS AS REQUIRED ON PLANS.

34. ANY LOCATION WHERE THE ABOVE REQUIREMENTS CANNOT BE MET SHALL BE COMPLETED USING CAST IN PLACE MATERIALS MEETING THE REQUIREMENTS OF THIS STANDRD DRAWING. ANY ADDITIONAL MATERIALS OR COSTS ASSOCIATED WITH THE USE OF PRECAST SHALL BE PAID FOR BY THE CONTRACTOR AND MAY NOT BE CHARGED TO SCDOT.

35. PRECAST THROAT FOR CATCH BASIN TYPE 17 MUST BE INSTALLED WITH RESPECT TO DIRECTION OF WATER FLOW (I.E. THROAT INLET MUST BE UPHILL FROM BOX).

36. PRECAST CONCRETE CIRCULAR STRUCTURES (AS SHOWN ON 719-420-00) ARE REQUIRED FOR THE FOLLOWING APPLICATIONS UNLESS PROHIBITED BY THE PLANS OR SPECIAL PROVISIONS.

(a) ON DRAINAGE STRUCTURES WITH A DEPTH EQUAL TO OR GREATER THAN 12 FEET.

(b) ON DRAINAGE STRUDCTURES WHERE THE FLOW LINE ELEVATION OF THE INLET PIPE IS EQUAL TO OR HIGHER THAN THE INSIDE TOP (SOFFIT) OF THE OUTLET PIPE.

(c) AS REQUIRED BY THE PROJECT PLANS.

37. THE PAY ITEMS SHALL BE:
CATCH BASIN TYPE 17____________________EA.
ADDITIONAL LENGTH CATCH BASIN____________EA.

REFERENCES
NATIONAL DOCUMENTS: ASTM C55, ASTM A706, AASHTO M55, AASHTO M221
SCDOT DOCUMENTS: --------------
RELATED DRAWINGS & KEYWORDS: 719-017-01 TO 719-017-02, 719-550-00, 719-420-00, 719-425-00, 719-510-00, 719-305-00, 719-310-00

PRECONSTRUCTION SUPPORT ENGINEER
SOUTH CAROLINA REGISTERED PROFESSIONAL ENGINEER NO. 8858 EDWIN SYLVESTER EARGLE, II
SIGNATURE
MARCH 3, 2008
DATE

#	DATE	CHK	DESCRIPTION
6			
5			
4			
3			
2			
1			
0	3/2008	DSO	GENERAL REVISIONS

SCDOT
SOUTH CAROLINA DEPARTMENT OF TRANSPORTATION
DESIGN STANDARDS OFFICE
955 PARK STREET
ROOM 405
COLUMBIA, SC 29201

STANDARD DRAWING
CATCH BASIN TYPE 17
719-017-02
EFFECTIVE LETTING DATE MAY 2008

SEAL: SOUTH CAROLINA LICENSE PROFESSIONAL ENGINEER No. 26505 CARLA MUSCARELLA 10/17/16

COA: SOUTH CAROLINA CERTIFICATE OF AUTHORIZATION WOOLPERT, INC. No. C02990

No.	DATE	REVISION

PROJECT No: 74840
DATE 04/04/16
DES. WLPRT
DR. VT
CKD. PAS

WOOLPERT
2000 Center Point Road
Suite 2200
Columbia, SC 29210
803.731.0261
FAX: 803.731.0132

MERRIFIELD STORM WATER IMPROVEMENTS
GREENVILLE COUNTY
SOUTH CAROLINA

DETAILS

SHEET NO.
C304

REFERENCES

NATIONAL DOCUMENTS

ASTM C55, ASTM A706, AASHTO M55, AASHTO M105, AASHTO M306, AASHTO M111

SCDOT DOCUMENTS

QUALIFIED PRODUCT LIST 14, QUALIFIED PRODUCT LIST 13

RELATED DRAWINGS & KEYWORDS

719-110-01 TO 719-11-02, 719-105-01, 719-550-00, 719-420-00, 719-425-00, 719-305-00, 719-310-00

PRECONSTRUCTION SUPPORT ENGINEER

SOUTH CAROLINA REGISTERED PROFESSIONAL ENGINEER NO. 8858 EDWIN SYLVESTER EARGLE, II

SIGNATURE

MARCH 3, 2008

DATE

#	DATE	CHK	DESCRIPTION
6			
5			
4			
3			
2			
1			
0	3/2008	DSO	GENERAL REVISIONS

SCDOT

SOUTH CAROLINA DEPARTMENT OF TRANSPORTATION
DESIGN STANDARDS OFFICE
955 PARK STREET
ROOM 405
COLUMBIA, SC 29201

STANDARD DRAWING

DROP INLET (24"X36") DETAILS

719-110-01

EFFECTIVE LETTING DATE MAY 2008

THIS DRAWING IS NOT TO SCALE

CONTRACTOR MAY USE PRECAST OR BUILT IN PLACE CONSTRUCTION AS NOTED OR COMBINE OPTIONS AS DESIRED. SEE QUALIFIED PRODUCT LIST 14 FOR MANUFACTURERS OF PRECAST ITEMS.

24"X36" DROP INLET	
BUILT IN PLACE	① 24"X36" DROP INLET BOTTOM SLAB (PC OR CIP 40"X52"X6") AND ③ BRICK WALLS (8") AND ④ 24"X36" DROP INLET FRAME AND GRATE
PRECAST	⑥ PRECAST BOX CONFORMING TO STD. DRAWING 719-305-00 OR 719-310-00 AND(3'X2'XH) ④ 24"X36" DROP INLET FRAME AND GRATE

BUILT IN PLACE	PRECAST
24"X36" DROP INLET ④	
BRICK ③	PRECAST BOX CONFORMING TO STD. DRAWING 719-310-00 OR 719-305-00
	24"X36" ⑥
24"X36" DROP INLET BOTTOM SLAB ①	

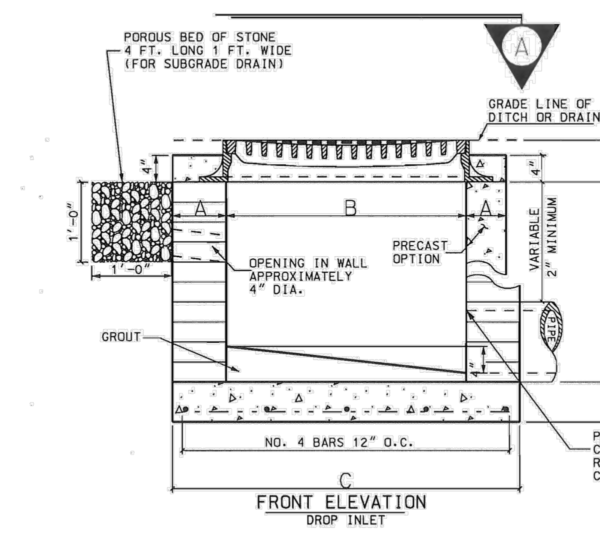

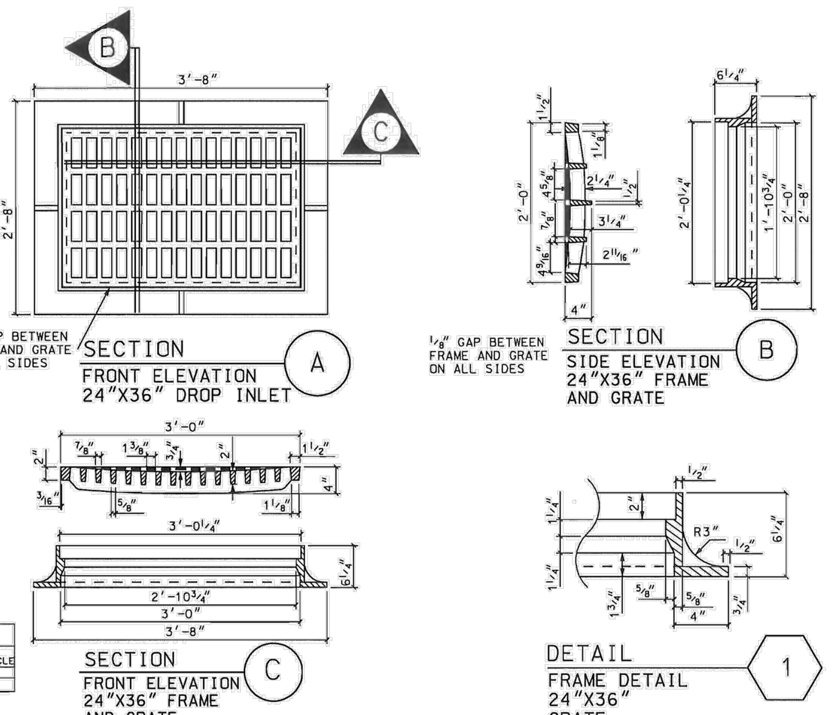

TABLE 719-110B			
DESCRIPTION	ADA	NON ADA BICYCLE	VEHICLE
(24"X36") DROP INLET	NO	YES	YES

USE ANYWHERE OUTSIDE OF DESIGNATED PEDESTRIAN PATHS. (OUTSIDE OF SIDEWALKS & CROSSWALKS)

TABLE 719-110A STANDARD PC ITEMS FOR DROP INLET
(24"X36") DROP INLET BOTTOM SLAB (PC OR CIP 40"X52"X6")
SEE ALSO STD. DRAWING 719-310-00 OR 719-305-00

24"X36" DROP INLET		
DIMENSION	BUILT IN PLACE OPTION	PRECAST
A	8"	6"
B	36"	SEE STD. DRAWING 719-305-00 AND 719-310-00 (2'X3'XH) PRECAST BOX
C	4'-4"	SEE STD. DRAWING 719-305-00 AND 719-310-00 (2'X3'XH) PRECAST BOX

NOTES:

1. SEE 719-105-01 FOR DROP INLET (24X24). FOR BUILT IN PLACE CONSTRUCTION OF THE CATCH BASIN WALLS, EITHER BRICK MASONRY (WALLS ONLY) OR CIP CLASS 3000 CONCRETE MAY BE USED. FOR PRECAST CONSTRUCTION, A MINIMUM OF CLASS 4000P CONCRETE SHALL BE USED.

2. CONCRETE WALLS ARE TO BE 6" THICK WITH A MINIMUM REINFORCING STEEL AREA 0.20 SQUARE INCHES PER FOOT UNLESS NOTED. FOR BRICK, THE WALLS ARE TO BE 8" THICK CONCRETE BRICK AND SIMILAR SOLID UNITS SHALL CONFORM TO THE REQUIREMENTS OF ASTM C 55, GRADE S-11. THE INTERIOR DIMENSIONS ARE TO REMAIN AS SHOWN FOR EITHER TYPE OF CONSTRUCTION.

3. THE BOTTOM SLAB OF THE BOX SHALL BE A MINIMUM OF 6" THICK REINFORCED CONCRETE (CLASS 3000 OR 4000P) WITH A REINFORCING STEEL AREA OF 0.20 SQUARE INCHES PER FOOT. WIRE MESH BE USED IN LIEU OF STEEL BARS PROVIDED A MINIMUM OF 0.20 SQUARE INCHES PER FOOT I S MET.

4. MORTAR SHALL BE TYPE S OR M.

5. REINFORCING STEEL SHALL BE ASTM A-706, LOW-ALLOY STEEL DEFORMED BARS FOR CONCRETE REINFORCEMENT, GRADE 60. WIRE MESH SHALL CONFORM TO AASHTO M 55 AND M.

6. SEE STANDARD DRAWING 719-550-00 FOR STEPS, WHICH ARE REQUIRED WHEN STRUCTURE DEPTH EXCEEDS 4'-6".

7. SEE STANDARD DRAWINGS 719-420-00 AND 719-425-00 FOR DEPTHS GREATER THAN 12'. PRECAST CONCRETE CIRCULAR DRAINAGE STRUCTURES ARE REQUIRED WHEN THE DEPTH FROM THE TOP OF TH E DRAINAGE BOX BOTTOM SLAB TO THE TOP OF THE GROUND EXCEEDS 12'-0".

8. LOCATION AND SIZE OF PIPES ARE SITE SPECIFIC. (SEE DRAINAGE PLANS). THE BOTTOM OF THE CATCH BASIN IS TO BE GROUTED TO THE LOWEST FLOW LINE ELEVATION OF ALL PIPES. BOTTOM SLAB IS CAST IN PLACE WITH PIPES INSTALLED. BOTTOM SLAB THICKNESS MUST BE ACHIEVED BEYOND PIPE OUTSIDE DIAMETER.

9. THE FLOOR OF THE BASIN MUST SLOPE IN THE DIRECTION OF THE OUTLET PIPE AS SHOWN AND THE INSIDE OF OUTLET PIPE SHALL BE FLUSH WITH FLOOR OF BASIN.

10. SEE STANDARD DRAWING 719-305-00 OR 719-310-00 FOR MAXIMUM PIPE DIAMETERS. THE PIPE SIZES SHOWN ARE MAXIMUM FOR BRICK AND PRECAST BOXES WHEN PIPE ENTERS PERPENDICULAR AND AT THE CENTER OF THE BOX WALL. CONTRACTOR SHOULD CONFIRM THAT PIPE USED FITS APPROPRIATELY INTO BOX.

FRAME AND GRATE NOTES:

11. ALL CASTINGS SHALL CONFORM TO AASHTO M 105, CLASS 35B AND THE SPECIFICATIONS OF AASHTO M 306

12. (a) STEEL GRATES AND FRAME MAY BE USED IN LIEU OF CAST IRON AS LONG AS THE LOADING (NOTE 12d) AND HYDRAULIC REQUIREMENTS ARE MET, AND ARE ON THE DEPARTMENT'S LIST OF APPROVED SUPPLIERS. (QUALIFIED PRODUCT LIST 45)
(b) STEEL GRATES SHALL BE HOT DIP GALVANIZED IN ACCORDANCE WITH AASHTO M 111.
(C) STEEL GRATES AND FRAMES SHALL BE DIMENSIONED TO BE INTERCHANGEABLE WITH EACH PIECE OF THE CAST IRON GRATE AND FRAME SHOWN. STEEL GRATES MUST HAVE POSITIVE MEANS TO BE RETAINED IN THE FRAME.
(d) STRENGTH REQUIREMENTS OF STEEL GRATES AND FRAMES MUST MEET AASHTO M 306
(e) MANUFACTURERS DESIRING TO BE PLACED ON THE DEPARTMENT'S QUALIFIED PRODUCT LIST SHOULD CONTACT THE MATERIALS AND RESEARCH ENGINEER FOR PROCEDURES.

13. THE LONGEST DIMENSIONS OF THE OPENING IN THE IRON GRATE SHOULD BE ORIENTED IN THE DIRECTION OF FLOW, IF PRACTICABLE. THIS GRATE IS NOT SUITABLE FOR PEDESTRIAN TRAFFIC BECAUSE GRATE OPENINGS EXCEED 1/2".

14. AS SHOWN BY THIS DRAWING, THE FRAME IS SET LEVEL, BUT THE RESIDENT CONSTRUCTION ENGINEER MAY SET SAME ON SLOPE AS REQUIRED BY LOCAL DRAINAGE CONDITIONS.

15. AFTER THE FRAME IS SET IN ITS FINAL POSITION, IT IS TO BE ENCASED WITH CONCRETE AS SHOWN BY DRAWING.

16. ALL MANUFACTURING PROCESSES FOR THE FRAME AND GRATE MUST OCCUR IN THE UNITED STATES.

PRECAST NOTES:

17. THE USE OF PRECAST UNITS WILL NOT RELIEVE THE CONTRACTOR OF THE RESPONSIBILITY OF OBTAINING SATISFACTORY INSTALLATIONS. SEE STANDARD DRAWINGS FOR PRECAST CONCRETE DRAINAGE BOX OR STRUCTURE FOR ADDITIONAL DETAILS AND SPECIFICATIONS.

18. LIFT HOLES AND/OR DEVICES MAY BE PLACED AS NECESSRY. ALL LIFT HOLES SHALL BE GROUTED SHUT PRIOR TO COMPLETION OF THE INSTALLATION. ALL LIFTING METHODS MUST MEET OSHA REGULATIONS.

19. THE CONTRACTOR SHALL USE A SINGLE SOURCE MANUFACTURER CHOSEN FROM THE LIST ON QUALIFIED PRODUCT LIST 14 FOR PRECAST ITEMS ON THIS DRAWING.

20. FOLLOW QUALIFIED PRODUCT POLICY 14 IN ORDER TO BE LISTED ON QUALIFIED PRODUCT LIST 14.

21. CONTRACTOR MAY SUBMIT DESIGN DRAWINGS AND CALCULATIONS FOR MODIFICATIONS TO THIS ITEM ON A PROJECT BY PROJECT BASIS. MODIFICATIONS TO THESE ITEMS WILL NOT BE LISTED ON ANY QUALIFIED PRODUCT LIST. SUBMIT ALL PROPOSALS FOR PROJECT SPECIFIC MODIFICATIONS TO THE RESIDENT ENGINEER FOR REVIEW BY THE ENGINEER OF RECORD.

22. JOINTS BETWEEN INSTALLED PIECES AND PRECAST ITEMS TO BE PLACED SHALL BE SEALED WITH A 1/2" GROUT LIFT OR AN APPROPRIATE PLASTIC PREFORMED GASKET (FROM QUALIFIED PRODUCT LIST 13.)

PRECAST INSTALLATION NOTES:

23. BED SHALL BE PREPARED AND COMPACTED FOR PRECAST DRAINAGE STRUCTURE AS REQUIRED BY SCDOT STANDARD SPECIFICATIONS FOR PRECAST ITEMS. ELEVATION OF BEDDING MATERIAL SHALL BE APPROPRIATE TO ACCOMMODATE ELEVATION OF ALL PIPES AND REQUIRED BOX TOP ELEVATION.

24. PLACE AND LEVEL PRECAST BOX OR SLAB.

25. PIPES SHALL BE INSTALLED AND GROUTED IN PLACE.

26. PIPES AND BOX SHALL BE BACKFILLED AND COMPACTED AS REQUIRED BY SCDOT STANDARD SPECIFICATIONS.

27. ANY LOCATION WHERE THE ABOVE REQUIREMENTS CANNOT BE MET SHALL BE COMPLETED USING CAST IN PLACE MATERIALS MEETING THE REQUIREMENTS OF THIS STANDARD DRAWING. ANY ADDITIONAL MATERIALS OR COSTS ASSOCIATED WITH THE USE OF PRECAST SHALL BE PAID FOR BY THE CONTRACTOR AND MAY NOT BE CHARGED TO SCDOT.

28. THE CONTRACT UNIT PRICE FOR DROP INLETS SHALL INCLUDE THE COST OF FURNISHING ALL MATERIALS, (BUILT IN PLACE OR PRECAST), AND WORK INCIDENTAL TO THE CONSTRUCTION OF THE STRUCTURE COMPLETE IN PLACE AS SHOWN, INCLUDING THE CURB AND GUTTER, IN ACCORDANCE WITH THE SCDOT STANDARD SPECIFICATIONS FOR HIGHWAY CONSTRUCTION (LATEST EDITION).

29. PRECAST CONCRETE CIRCULAR STRUCTURES (AS SHOWN ON 719-420-00) ARE REQUIRED FOR THE FOLLOWING APPLICATIONS UNLESS PROHIBITED BY THE PLANS OR SPECIAL PROVISIONS.

(a) ON DRAINAGE STRUCTURES WITHA A DEPTH EQUAL TO OR GREATER THAN 12 FEET.

(b) ON DRAINAGE STRUCTURES WHERE THE FLOW LINE ELEVATION OF THE INLET PIPE IS EQUAL TO OR HIGHER THAN THE INSIDE TOP (SOFFIT) OF THE OUTLET PIPE.

(c) AS REQUIRED BY THE PROJECT PLANS.

30. THE PAY ITEM SHALL BE:
DROP INLET (24"X36")________________EA

USE SHEETS 719-110-01 THROUGH 719-110-02 FOR THIS ITEM.

REFERENCES

NATIONAL DOCUMENTS

SCDOT DOCUMENTS

SCDOT SUPPLEMENTAL TECHNICAL SPECIFICATIONS SC-M-714
ENGINEERING DIRECTIVE MEMORANDUM 24
INSTRUCTIONAL BULLETIN 2007-04
QUALIFIED PRODUCT LIST 14

RELATED DRAWINGS & KEYWORD

714-005-00
714-110-00
714-205-00

PRECONSTRUCTION SUPPORT ENGINEER

SOUTH CAROLINA REGISTERED PROFESSIONAL ENGINEER NO. 8858 EDWIN SYLVESTER EARGLE, II

SIGNATURE

JULY 30, 2009

DATE

#	DATE	CHK	DESCRIPTION
6			
5			
4			
3			
2			
1	7/2009	DSO	NOTE 2
0	3/2008	DSO	NEW STANDARD

SCDOT

SOUTH CAROLINA DEPARTMENT OF TRANSPORTATION
DESIGN STANDARDS OFFICE
955 PARK STREET
ROOM 405
COLUMBIA, SC 29201

STANDARD DRAWING

PIPE CULVERTS (RIGID PIPE COMPLETED TRENCH)

714-105-00

EFFECTIVE LETTING DATE SEPTEMBER 2009

THIS DRAWING IS NOT TO SCALE

NOTES:

1. USE MATERIALS AND METHODS OF CONSTRUCTION FOR PERMANENT PIPE IN CONFORMANCE WITH SCDOT SUPPLEMENTAL SPECIFICATION SC-M-714.

2. SEE SHEET 714-205-XX FOR RCP FILL HEIGHT TABLES.

3. WHEN CONNECTING DISSIMILAR PIPE, USE DRAINAGE STRUCTURE OR DESIGN INTERFACE. DO NOT MIX PIPE TYPE, CLASS, OR DETAILS WITHIN A SINGLE RUN OF PIPE BETWEEN DRAINAGE STRUCTURES. SEE QUALIFIED PRODUCT LIST 14 FOR PRECAST REINFORCED CONCRETE DRAINAGE STRUCTURES.

4. USE AT LEAST THE MINIMUM CLASS OR GAGE REQUIRED TO CARRY THE FILL HEIGHT AS SPECIFIED IN THE STANDARD DRAWING FILL HEIGHT TABLES. WHEN PIPE CLASS IS SPECIFIED IN THE PLANS, CONFIRM THAT THE SPECIFIED CLASS CAN CARRY THE INSTALLED MAXIMUM COVER BEFORE BACKFILLING THE PIPE. IF INSTALLED GRADES VARY FROM THOSE SHOWN IN THE PLANS, CONFIRM THAT PIPE CLASS IS SUFFICIENT TO CARRY THE INSTALLED FILL HEIGHTS. DO NOT REDUCE THE PIPE CLASS BELOW THE CLASS SHOWN IN THE PLANS UNLESS DIRECTED BY THE ENGINEER.

5. USE RIPRAP, BEVELED ENDS, REINFORCED CONCRETE SLAB, WINGWALLS, OR END TREATMENT AS DESCRIBED IN THE PLANS, SCDOT SUPPLEMENTAL SPECIFICATION SC-M-714, OR SCDOT STANDARD DRAWINGS.

6. PIPE EMBEDMENT ZONE BACKFILL MUST MEET OR EXCEED THE MINIMUM MATERIAL AND COMPACTION REQUIREMENTS OF THE ROADWAY EMBANKMENT FOR THE SPECIFIED BURIAL DEPTH WITHOUT DAMAGING THE PIPE.

7. FOR SHALLOW INSTALLATIONS (PAVEMENT ON MINIMUM COVER), INSTALL PIPE EMBEDMENT ZONE MATERIAL TO PREVENT SETTLEMENT AROUND THE PIPE. IF REQUIRED, USE STRUCTURAL BACKFILL MATERIAL OR CLSM TO PREVENT THIS SETTLEMENT.

8. USE THIS INSTALLATION ONLY IN LOCATIONS ABOVE GROUNDWATER TABLE. USE THIS INSTALLATION IN LOCATIONS WHERE PIPE SYSTEM IS NOT SUBJECTED TO PRESSURE HEAD.

9. FOR DETAILS 1 & 2, INSTALL STRUCTURAL BACKFILL AS SHOWN, AND USE BORROW EXCAVATION REQUIREMENTS FOR SOIL ABOVE PIPE EMBEDMENT ZONE.

10. FOR DETAILS 3 & 4, INSTALL STRUCTURAL BACKFILL AS SHOWN FROM TOP OF PIPE TO TOP OF SUBGRADE.

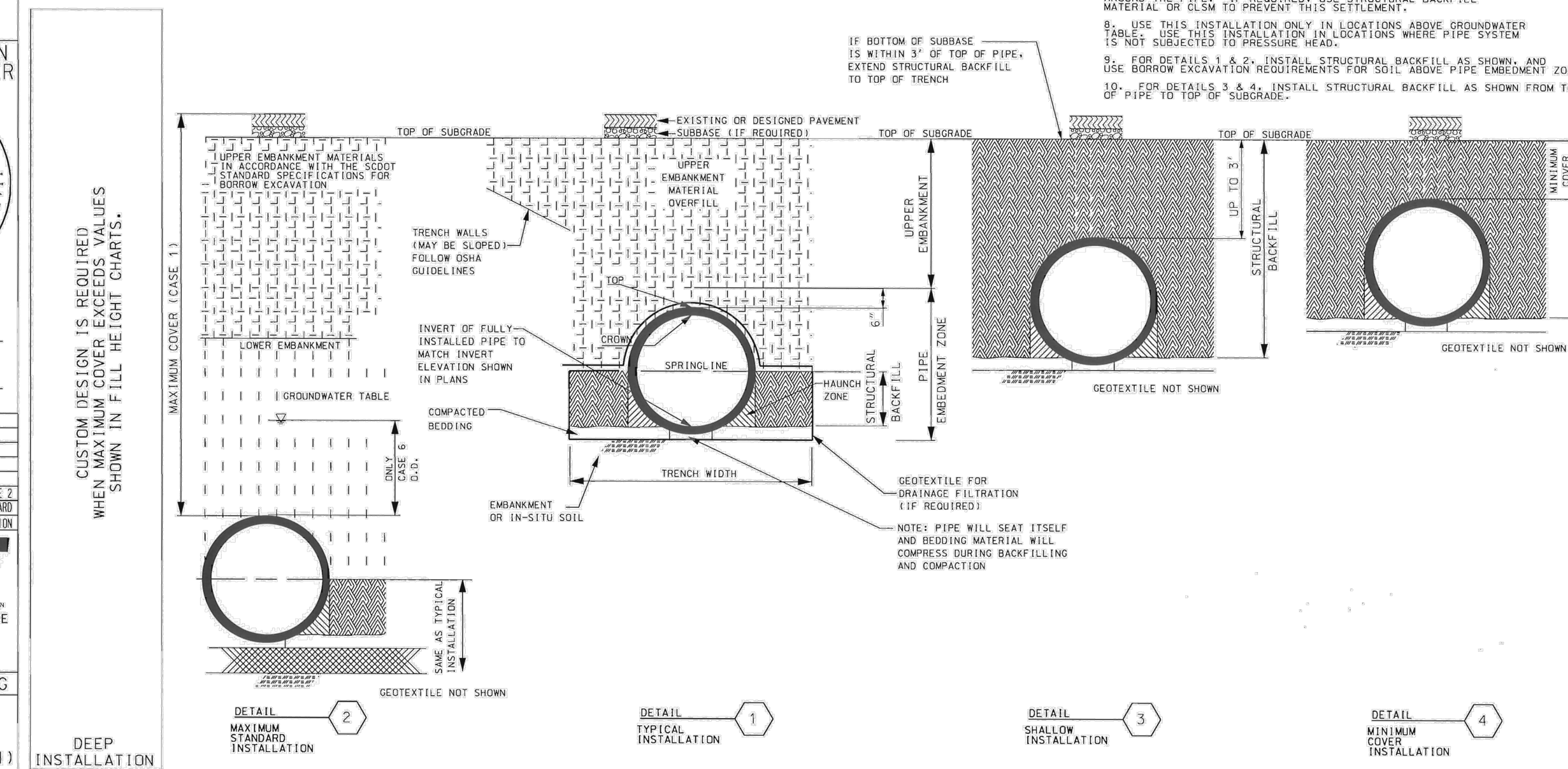

STANDARD TRENCH TERMINOLOGY
(COMPLETED RIGID PIPE INSTALLATION)

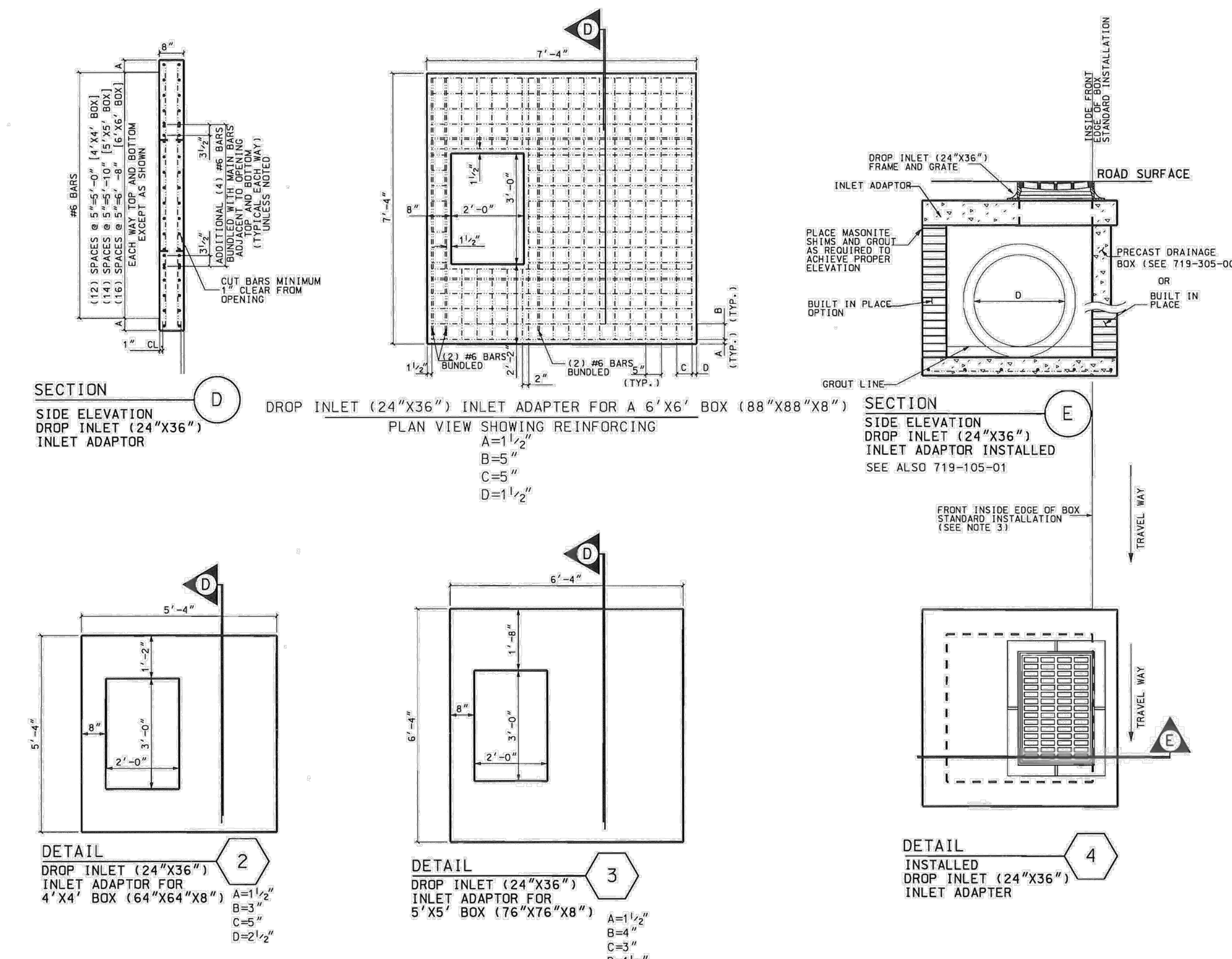

TABLE 719-110D	
STD. DRAWINGS OF INLET ADAPTORS THAT HAVE SIMILAR STRUCTURAL DESIGN	
CB TYPE 1	719-001-04
CB TYPE 9	719-009-04
DI 24"X24"	719-105-02
DI 24"X36"	719-110-02
MANHOLE	719-505-03
JB SHALLOW	719-330-02

TABLE 719-110C PRECAST ITEMS
DROP INLET (24"X36") INLET ADAPTOR FOR 4X4 BOX (64"X64"X8")
DROP INLET (24"X36") INLET ADAPTOR FOR 5X5 BOX (76"X76"X8")
DROP INLET (24"X36") INLET ADAPTOR FOR 6X6 BOX (88"X88"X8")
SEE ALSO 719-105-01, 719-310-00, & 719-305-00

USE SHEETS 719-110-01 THROUGH 719-110-02 FOR THIS ITEM.
THIS DRAWING IS NOT TO SCALE

NOTES:

1. ALL MATERIALS, DESIGN, MANUFACTURING, TESTING AND PRODUCT PERFORMANCE FOR PRECAST CONCRETE COMPONENTS AND ACCESSORIES SHALL BE IN ACCORDANCE WITH AASHTO M 199 AND SECTION 719 OF THE SCDOT STANDARD SPECIFICATIONS FOR HIGHWAY CONSTRUCTION(LATEST EDITION).

2. FOR PRECAST CONSTRUCTION, A MINIMUM OF CLASS 4000P CONCRETE SHALL BE USED.

3. DROP INLET (24"X36") INLET ADAPTORS ARE DESIGNED TO BE REVERSIBLE AND CAN BE ROTATED UP TO 180 DEGREES TO SATISFY FIELD CONDITIONS. ENGINEER SHALL NOTE BOX POSITION ON FINAL PLANS WHEN DIFFERENT FROM STANDARD.

4. ALL DROP INLET (24"X36") INLET ADAPTOR SLABS ARE TO BE A MINIMUM OF 8 INCHES THICK WITH THE REINFORCING STEEL PLACED RELATIVE TO THE DROP INLET OPENING.

5. REINFORCING STEEL SHALL BE ASTM A-706, LOW-ALLOY STEEL DEFORMED BARS FOR CONCRETE REINFORCEMENT, GRADE 60.

6. USE OF INLET ADAPTOR SLABS ON EXISTING BOXES MUST BE APPROVED BY THE ENGINEER BEFORE INSTALLATION.

7. FOR USE ON NEW BUILT IN PLACE BRICK BOXES THE MAXIMUM OUTSIDE DIMENSIONS OF THE BOX SHALL NOT EXCEED THE OUTSIDE DIMENSIONS OF THE ADAPTOR SLAB.

8. THE ADAPTER SLAB AS SHOWN IS DESIGNED FOR HS 25 LIVE LOAD.

9. CHAIRS ARE TO BE USED TO POSITION THE STEEL MATS IN THE ADAPTOR SLAB.

10. RISERS MUST BE PLACED BETWEEN BOX AND INLET ADAPTOR AND MAY NOT BE PLACED BETWEEN INLET ADAPTOR AND DROP INLET.

11. SEE DRAWING 719-105-01 OF THE STANDARD DRAWINGS FOR DETAILS ON DROP INLETS.

12. SEE SCDOT STANDARD DRAWINGS 719-315-00 AND 719-305-00 FOR APPROPRIATE BOX SIZE BASED ON PIPE DIAMETERS REQUIRED.

13. SUPPLY PRECAST CONCRETE COMPONENTS FOR DRAINAGE ITEMS AT EACH LOCATION FROM A SINGLE SOURCE PRECAST MANUFACTURER THAT HAS BEEN INSPECTED AND APPROVED BY THE MATERIALS AND RESEARCH ENGINEER. SUPPLY ALL INTERCHANGEABLE PRECAST PARTS ON ENTIRE PROJECT FROM A SINGLE SOURCE MANUFACTURER LISTED ON QUALIFIED PRODUCT LIST 14 UNLESS APPROVED BY RCE. ITEMS FROM MULTIPLE MANUFACTURERS SHOULD NOT BE INSTALLED IN INDIVIDUAL LOCATIONS.

14. THE USE OF PRECAST UNITS WILL NOT RELIEVE THE CONTRACTOR OF THE RESPONSIBILITY OF OBTAINING SATISFACTORY INSTALLATIONS. SEE STANDARD DRAWINGS FOR PRECAST CONCRETE DRAINAGE BOX OR STRUCTURE FOR ADDITIONAL DETAILS AND SPECIFICATIONS.

15. LIFT HOLES AND/OR DEVICES MAY BE PLACED AS NECESSARY. ALL LIFT HOLES SHALL BE GROUTED SHUT PRIOR TO COMPLETION OF THE INSTALLATION. ALL LIFTING METHODS MUST MEET OSHA REGULATIONS.

16. THE CONTRACTOR SHALL USE MANUFACTURERS LISTED ON QUALIFIED PRODUCT LIST 14 FOR PRECAST ITEMS ON THIS DRAWING. PRECAST MANUFACTURER SHALL FOLLOW QUALIFIED PRODUCT POLICY 14 BEFORE SUPPLYING THIS ITEM ON SCDOT PROJECTS.

17. CONTRACTOR MAY SUBMIT DESIGN DRAWINGS AND CALCULATIONS FOR MODIFICATIONS TO THIS ITEM ON A PROJECT BY PROJECT BASIS. MODIFICATIONS TO THESE ITEMS WILL NOT BE LISTED ON ANY QUALIFIED PRODUCT LIST. SUBMIT ALL PROPOSALS FOR PROJECT SPECIFIC MODIFICATIONS TO THE RESIDENT ENGINEER FOR REVIEW BY THE ENGINEER OF RECORD.

18. JOINTS BETWEEN INSTALLED PIECES AND PRECAST ITEMS TO BE PLACED SHALL BE SEALED WITH A 1/2" GROUT LIFT OR AN APPROPRIATE PLASTIC PREFORMED GASKET (FROM QUALIFIED PRODUCT LIST 13.)

19. THE CONTRACT UNIT PRICE FOR DROP INLETS WITH STANDARD BOX SHALL INCLUDE THE COST OF FURNISHING ALL MATERIALS, INCLUDING INLET ADAPTOR, INLET SYSTEM, AND DRAINAGE BOX, AND WORK INCIDENTAL TO THE CONSTRUCTION OF THE STRUCTURE COMPLETE IN PLACE AS SHOWN IN ACCORDANCE WITH THE SCDOT STANDARD SPECIFICATIONS FOR HIGHWAY CONSTRUCTION (LATEST EDITION).

20. PRECAST CONCRETE CIRCULAR STRUCTURES (AS SHOWN ON 719-420-00) ARE REQUIRED FOR THE FOLLOWING APPLICATIONS UNLESS PROHIBITED BY THE PLANS OR SPECIAL PROVISIONS.

(a) ON DRAINAGE STRUCTURES WITH A DEPTH EQUAL TO OR GREATER THAN 12 FEET.

(b) ON DRAINAGE STRUCTURES WHERE THE FLOW LINE ELEVATION OF THE INLET PIPE IS EQUAL TO OR HIGHER THAN THE INSIDE TOP (SOFFIT) OF THE OUTLET PIPE.

(c) AS REQUIRED BY THE PROJECT PLANS.

21. THE PAY ITEM SHALL BE
DROP INLET (24"X36") WITH STANDARD 4'X4' BOX................EA.
DROP INLET (24"X36") WITH STANDARD 5'X5' BOX................EA.
DROP INLET (24"X36") WITH STANDARD 6'X6' BOX................EA.
DROP INLET (24"X36") WITH MODIFIED BOX NO.(_)................EA.

REFERENCES

NATIONAL DOCUMENTS

AASHTO M199, ASTM A706

SCDOT DOCUMENTS

QUALIFIED PRODUCT LIST 14,
QUALIFIED PRODUCT LIST 13

RELATED DRAWINGS & KEYWORDS

719-110-01 TO 719-110-02, 719-001-04, 719-009-04, 719-110-02, 719-420-00, 719-505-03, 719-330-02, 719-105-01, 719-310-00, 719-305-00, 719-315-00

PRECONSTRUCTION SUPPORT ENGINEER

SOUTH CAROLINA REGISTERED PROFESSIONAL ENGINEER NO. 8858 EDWIN SYLVESTER EARGLE, II

SIGNATURE

MARCH 3, 2008

DATE

#	DATE	CHK	DESCRIPTION
6			
5			
4			
3			
2			
1			
0	3/2008	DSO	GENERAL REVISIONS

SCDOT

SOUTH CAROLINA DEPARTMENT OF TRANSPORTATION
DESIGN STANDARDS OFFICE
955 PARK STREET
ROOM 405
COLUMBIA, SC 29201

STANDARD DRAWING

DROP INLET (24"X36") INLET ADAPTOR

719-110-02

EFFECTIVE LETTING DATE MAY 2008

SOUTH CAROLINA LICENSE PROFESSIONAL ENGINEER No. 26505 CARLA MUSCARELLA 10/17/16

SEAL

SOUTH CAROLINA CERTIFICATE OF AUTHORIZATION WOOLPERT, INC. No. C02990

COA

No.	DATE	REVISION

PROJECT No: 74840
DATE 04/04/16
DES. WLPRT
DR. VT
CKD. PAS

WOOLPERT

2000 Center Point Road
Suite 2200
Columbia, SC 29210
803.731.0261
FAX: 803.731.0132

MERRIFIELD STORM WATER IMPROVEMENTS

GREENVILLE COUNTY

SOUTH CAROLINA

DETAILS

SHEET NO.

C305

REFERENCES

NATIONAL DOCUMENTS
AASHTO M259, AASHTO M273, AASHTO M198, ASTM C1433, ASTM C1577, AASHTO LRFD BRIDGE DESIGN SPECIFICATIONS, AASHTO STANDARD SPECIFICATIONS FOR HIGHWAY BRIDGES

SCDOT DOCUMENTS
SECTION 701,702,722,& 804 SCDOT STANDARD SPECIFICATIONS FOR HIGHWAY CONSTRUCTION

RELATED DRAWINGS & KEYWORDS
702-105-01, 705-105-02

PRECONSTRUCTION SUPPORT ENGINEER

SOUTH CAROLINA REGISTERED PROFESSIONAL ENGINEER NO. 8858 EDWIN SYLVESTER EARGLE, II

SIGNATURE

JANUARY 29, 2010
DATE

#	DATE	CHK	DESCRIPTION
6			
5			
4			
3			
2	1/2011	DSO	TITLE, NOTES 13,24,25& ADHESIVE, TABLE722-305A
1	3/2009	KNB	CHANGED NOTES
0	3/2008	DSO	GENERAL REVISIONS

SCDOT
SOUTH CAROLINA DEPARTMENT OF TRANSPORTATION
DESIGN STANDARDS OFFICE
955 PARK STREET
ROOM 405
COLUMBIA, SC 29201

STANDARD DRAWING
BOX CULVERT (TYPICAL INSTALLATION DETAILS)

722-305-00
EFFECTIVE LETTING DATE MAY 2010

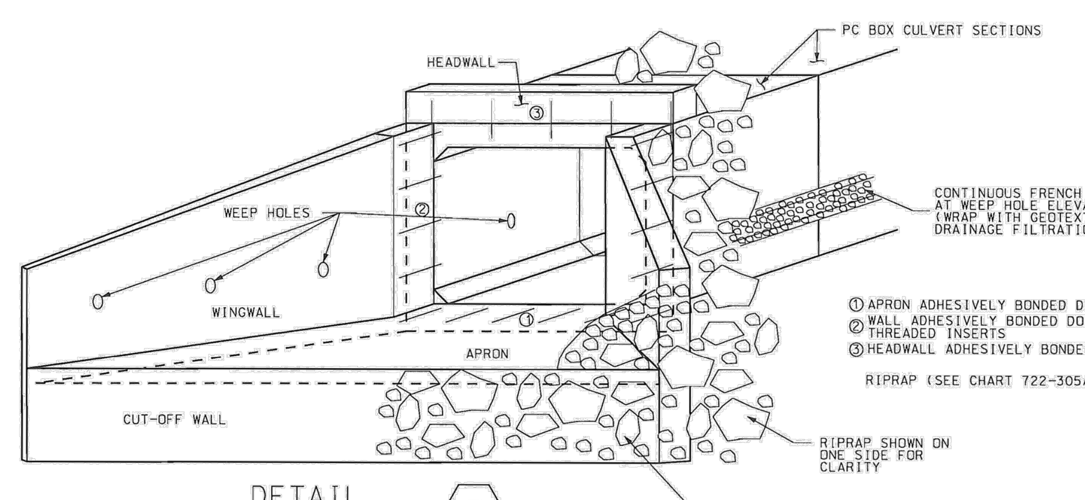

DETAIL 2
BOX CULVERT (PCBC SHOWN)

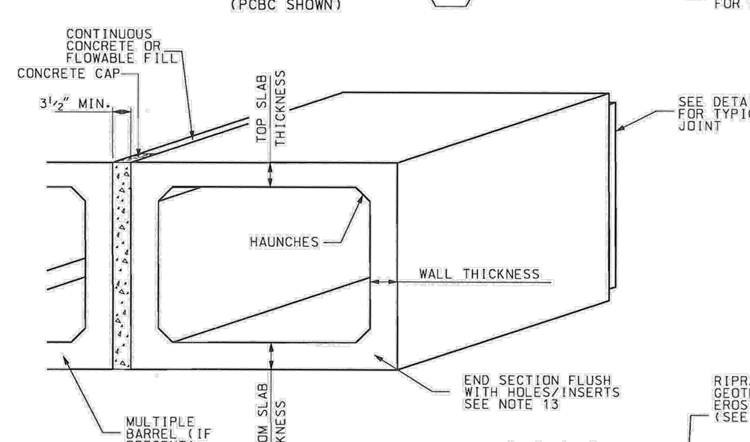

DETAIL 1
END VIEW

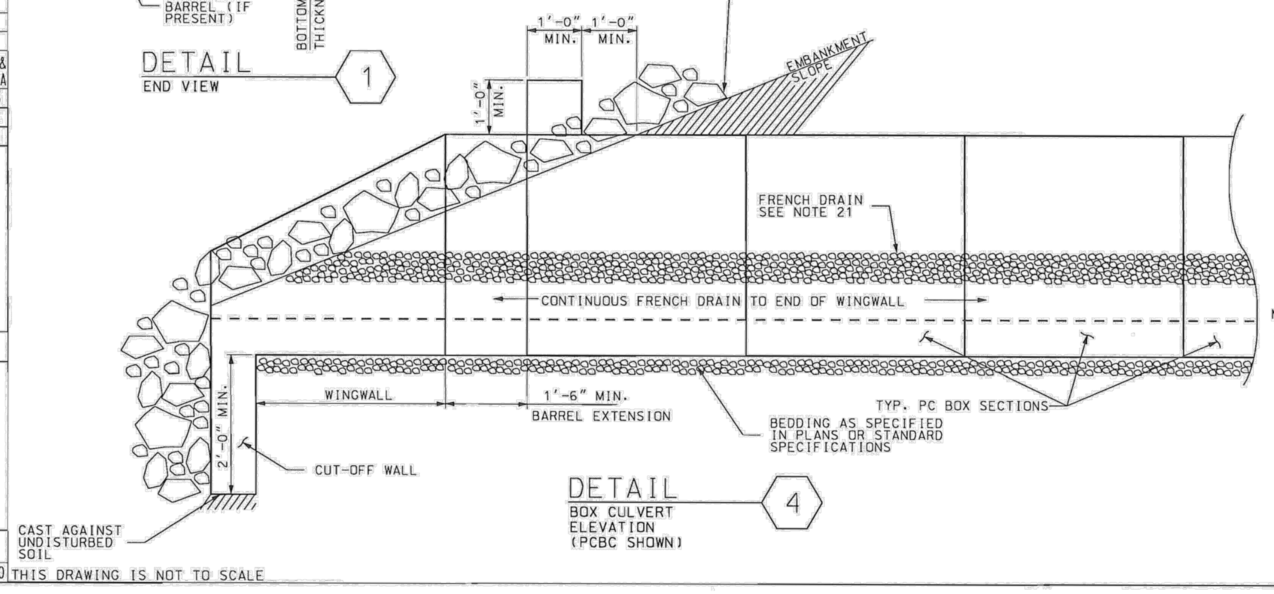

DETAIL 4
BOX CULVERT ELEVATION (PCBC SHOWN)

THIS DRAWING IS NOT TO SCALE

1.0 NOTES:

1.1 ALL MATERIALS, DESIGN, MANUFACTURING, TESTING, GEOMETRY, AND PRODUCT PERFORMANCE FOR REINFORCED CONCRETE BOX CULVERTS (RCBC) AND PRECAST CONCRETE BOX CULVERTS (PCBC) SHALL BE IN ACCORDANCE WITH AASHTO M 259 OR M 273 OR ASTM C 1433 OR C 1577 EXCEPT AS NOTED.

1.2 FABRICATION AND INSTALLATION SHALL COMPLY WITH THE SCDOT STANDARD SPECIFICATIONS.

1.3 WHEN LRFD DESIGN IS SPECIFIED, DESIGN PRECAST RCBC USING AASHTO LRFD BRIDGE DESIGN SPECIFICATIONS, CURRENT EDITION.

1.4 DESIGN TABLES OF AASHTO M 259, M 273, ASTM C1433, OR ASTM C 1577 MAY BE USED FOR PCBC BARREL SECTIONS IF SPECIFIED IN THE PLANS.

1.5 CONCRETE FOR PCBC SHALL BE MINIMUM CLASS 5000 MEETING THE REQUIREMENTS OF SECTION 701 OF THE SCDOT STANDARD SPECIFICATIONS FOR HIGHWAY CONSTRUCTION (LATEST EDITION). CONCRETE FOR RCBC AND CAST IN PLACE COMPONENTS SHALL BE MINIMUM CLASS 4000.

1.6 REINFORCING STEEL SHALL BE ASTM A 706, LOW-ALLOY STEEL DEFORMED BARS FOR CONCRETE REINFORCEMENT, GRADE 60. WIRE MESH SHALL CONFORM TO AASHTO M 55 AND M 221. REINFORCING STEEL LAYOUT SHALL BE IN ACCORDANCE WITH AASHTO M 259 OR M 273 OR ASTM 1433 OR ASTM 1577 OR AS SHOWN IN THE PLANS.

1.7 MANUFACTURERS WISHING TO SUPPLY PCBC FOR USE ON SCDOT PROJECTS SHALL FOLLOW REQUIREMENTS OF SCDOT QUALIFIED PRODUCT LIST 14.

1.8 SEE ALSO STANDARD DRAWINGS 722-105-01 & 722-105-02 BOX CULVERT MISCELLANEOUS DATA SHEET.

2.0 DESIGN:

2.1 SEE PROJECT PLANS FOR CULVERT DESIGN REQUIREMENTS. ALL BOX CULVERTS REQUIRE DESIGN.

2.2 DESIGN ALL BOX CULVERT COMPONENTS USING THE MOST CONSERVATIVE COMBINATION OF HIGHEST/LOWEST EXPECTED DESIGN EARTH DEAD LOAD IN CONJUNCTION WITH EITHER INTERSTATE, MILITARY, HS20, HL93 OR OTHER LINE LOAD SPECIFIED BY THE ENGINEER. IN GENERAL, NEW DESIGNS SHOULD INCLUDE ADDITIONAL CAPACITY BEYOND DESIGN FILL HEIGHTS IN ORDER TO ACCOMMODATE FIELD CHANGES.

2.3 DESIGN WINGWALLS TO BE SELF SUPPORTING. DO NOT TRANSFER WINGWALL LOADING INTO CULVERT BARREL.

2.4 APRON THICKNESS SHALL EQUAL THE THICKNESS OF THE BOTTOM SLAB OF THE CULVERT BARREL UNLESS SPECIFIED BY DESIGN.

2.5 FABRICATE END SECTIONS WITH EXPOSED END CAST FLUSH (WITHOUT TONGUE OR GROOVE) AND EITHER SHOP DRILL HOLES FOR ADHESIVELY BONDED DOWELS OR INSERTS FOR THREADED RODS. ANCHORS ARE INTENDED TO CONTROL DIFFERENTIAL SETTLEMENT, NOT AS A LOAD TRANSFER MECHANISM.

3.0 DETAILS:

3.1 PLACE CUT-OFF WALLS TO A DEPTH 2' BELOW THE SCOUR DEPTH, OR INTO UNWEATHERED ROCK.

3.2 USE MINIMUM CLASS B RIPRAP FOR BOX CULVERTS UP TO 3'X3', USE MINIMUM CLASS C RIPRAP FOR BOX CULVERTS LARGER THAN 3'X3'.

3.3 PLACE RIPRAP IN CUTOFF WALL TRENCH, BEHIND WINGWALLS AND HEADWALL, AND WRAPPED AROUND ENDS OF WINGWALLS AS NECESSARY. PLACE GEOTEXTILE FOR EROSION CONTROL UNDER RIPRAP AS SPECIFIED IN SCDOT STANDARD SPECIFICATIONS. WHERE KNOWN HIGH VELOCITY OF VOLUMES HAVE CAUSED DAMAGE TO THE RIPRAP SLOPE PROTECTION, PROVIDE LARGER RIPRAP, OR MORE SUBSTANTIAL EROSION CONTROL MEASURES.

4.0 INSTALLATION:

4.1 PREPARE BED FOR CULVERT SECTIONS AS INDICATED IN SECTION 722 OF THE SCDOT STANDARD SPECIFICATIONS OR AS INDICATED IN THE PLANS.

4.2 CONSTRUCT PCBC SECTIONS BEGINNING AT THE OUTLET END OF THE CULVERT. INSTALL GROOVE ENDS LAYING UPGRADE. CONSTRUCT RCBC BARREL WITH MINIMAL COLD JOINTS.

4.3 FOR PCBC APPLY JOINT SEALANT IN ACCORDANCE WITH AASHTO M 198 AND MANUFACTURER RECOMMENDATIONS. CONTINUE INSTALLATION OF PCBC SECTIONS IN ACCORDANCE WITH SECTION 722.

4.4 CONSTRUCT WINGWALLS, HEADWALLS, APRONS, AND CUTOFF WALLS.

4.5 BACKFILL AS REQUIRED, INSTALLING FRENCH DRAINS AT WEEP HOLE ELEVATIONS. SEE SCDOT STANDARD SPECIFICATIONS FOR HIGHWAY CONSTRUCTION SECTION 702.

4.6 TAKE CARE TO AVOID DAMAGE TO THE CULVERT SECTIONS DURING HANDLING, INSTALLATION, AND BACKFILLING OF SECTIONS.

4.7 MULTIPLE BARREL PCBC SECTIONS SHALL BE INSTALLED WITH A MINIMUM GAP OF 3½" BETWEEN WALLS OF ADJACENT BARRELS. THIS GAP SHALL BE FILLED WITH FLOWABLE FILL, AND THEN EXPOSED END SHALL BE CAPPED WITH AT LEAST 6" OF CLASS 3000 MIN. CONCRETE FOR EROSION PROTECTION. CONCRETE MAY BE USED FOR ENTIRE CAP IF DESIRED.

4.8 TYPICAL DETAILS SHOWN MAY BE APPLIED TO PRECAST AND CAST IN PLACE CONSTRUCTION.

PAY ITEMS:
SEE PROJECT PLANS FOR CULVERT SHEETS AND REQUIRED PAY ITEMS.

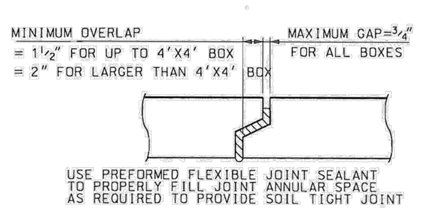

DETAIL 3
SOIL TIGHT JOINT

TABLE 722-305A
MINIMUM RIPRAP

MINIMUM CLASS	D_{50} (FT)	MINIMUM THICKNESS (FT)	BOX CULVERT OPENING SIZE (SF)
B	0.75	1.50	UP TO 36
C	1.30	2.60	LARGER THAN 36

REFERENCES

NATIONAL DOCUMENTS
AASHTO M259, AASHTO M273, AASHTO M55, AASHTO M225, ASTM A706, ASTM C1433, ASTM C1577

SCDOT DOCUMENTS
BRIDGE DESIGN MEMORANDUM DM0408

RELATED DRAWINGS & KEYWORDS
703-105-00
722-105-02

PRECONSTRUCTION SUPPORT ENGINEER

SOUTH CAROLINA REGISTERED PROFESSIONAL ENGINEER NO. 8858 EDWIN SYLVESTER EARGLE, II

SIGNATURE

MAY 27, 2010
DATE

#	DATE	CHK	DESCRIPTION
5			
4			
3			
2	5/2010	DSO	ADHESIVELY BONDED DOWEL UPDATED ALL NOTES
1	3/2009	DSO	ADDED/CHANGED NOTES
0	3/2008	DSO	GENERAL REVISIONS

SCDOT
SOUTH CAROLINA DEPARTMENT OF TRANSPORTATION
DESIGN STANDARDS OFFICE
955 PARK STREET
ROOM 405
COLUMBIA, SC 29201

STANDARD DRAWING
BOX CULVERT (MISCELLANEOUS DATA)

722-105-01
EFFECTIVE LETTING DATE JANUARY 2011

1.0 NOTES:

1.1 ALL WORKMANSHIP & MATERIALS SHALL CONFORM WITH THE LATEST EDITION OF THE SCDOT STANDARD SPECIFICATIONS OF HIGHWAY CONSTRUCTION, PLANS AND SPECIAL PROVISIONS.

1.2 SEE SHEET 722-105-02 FOR MINIMUM ADDITIONAL REINFORCEMENT DETAILS AROUND HOLES IN BOX CULVERTS.

1.3 ALL DIMENSIONS ARE SUBJECT TO EXISTING FIELD CONDITIONS AND SHALL BE VERIFIED BY THE CONTRACTOR.

1.4 THE CONTRACTOR IS TO USE DUE CARE IN PROTECTION OF ALL UTILITIES IN PLACE AND SERVICE SHALL NOT BE INTERRUPTED.

1.5 CONTRACTOR SHALL CONSTRUCT NEW STRUCTURE IN ACCORDANCE WITH THE PLANS.

1.6 POSITIONS LT.(LEFT), RT.(RIGHT), N.S. (NEAR SIDE), AND F.S.(FAR SIDE), WHERE REFERRED TO IN THE CULVERT PLANS, ARE RELATIVE TO THE DIRECTION OF STATIONING.

1.7 MINIMUM COVER OF MAIN REINFORCING STEEL SHALL BE 2" FROM THE SURFACE OF CONCRETE, UNLESS OTHERWISE NOTED.

1.8 CHAMFER ALL EXPOSED EDGES 3#4". CONSTRUCTION JOINTS ARE TO BE AS SHOWN IN THE PLANS OR THESE STANDARD DRAWINGS OR AS APPROVED BY THE ENGINEER (NOTE THAT REINFORCING BARS SHALL EXTEND THROUGH CONSTRUCTION JOINTS).

1.9 CONTRACTOR SHALL CONSTRUCT 3#4" MINIMUM FILLETS AT ALL JUNCTIONS OF SLAB AND WALL.

1.10 THE CONTRACTOR SHALL PROVIDE A STATEMENT CERTIFYING COMPLIANCE WITH THE DESIGN CRITERIA SPECIFIED SHOP DRAWINGS TO THE RESIDENT CONSTRUCTION ENGINEER FOR REVIEW. THE DRAWINGS SHALL INDICATE DESIGN CRITERIA, FILL HEIGHT, REINFORCING STEEL DETAILS (SHOWING ALL INFORMATION LISTED IN THE REINFORCING STEEL SCHEDULE AND BENDING DETAILS), MATERIAL SPECIFICATIONS, AND SHOW ADEQUATE DIMENSIONING TO MANUFACTURE AND INSPECT THE BOX CULVERT. A REGISTERED PROFESSIONAL ENGINEER IN THE STATE OF SOUTH CAROLINA SHALL CERTIFY THE SHOP DRAWINGS. DRAWINGS SHALL BE SUBMITTED TO THE FOLLOWING ADDRESS WITH A COPY OF THE TRANSMITTAL LETTER TO THE RESIDENT CONSTRUCTION ENGINEER.

1.11 SEE STANDARD DRAWING 703-105-00 FOR REINFORCEMENT BENDING DETAILS AND PIECE MARK CODE.

1.12 P.F.D. = PER FOOT OF DEPTH, AND P.F.L. = PER FOOT OF LENGTH WHERE INDICATED IN THE CULVERT PLANS.

1.13 FOR PRECAST CULVERTS, CONTRACTOR SHALL SUBMIT SHOP DRAWINGS FOR REVIEW BY THE ENGINEER OF RECORD BEFORE FABRICATION OF CULVERT SECTIONS.

2.0 REFERENCED SPECIFICATIONS:
LATEST EDITION OF THE SCDOT STANDARD SPECIFICATIONS OF HIGHWAY CONSTRUCTION
LATEST EDITION OF THE AASHTO STANDARD SPECIFICATIONS FOR HIGHWAY BRIDGES
AASHTO ART. 3.7.4 HS 20-44
AASHTO M-259, TABLE 2
AASHTO M-273, TABLE 2
AASHTO M-55
AASHTO M-225
ASTM A-706

3.0 ADHESIVELY BONDED DOWELS:

3.1 COSTS OF FURNISHING & PLACING ADHESIVELY BONDED DOWELS IN EXISTING MATERIAL SHALL BE INCLUDED IN THE UNIT PRICE BID FOR THE CULVERT EXTENSION PREPARATION PAY ITEM. COSTS OF FURNISHING & PLACING ADHESIVELY BONDED DOWELS IN NEW PRECAST SECTIONS SHALL BE INCLUDED IN THE UNIT PRICE BID FOR THE PC BOX CULVERT PAY ITEM.

3.2 DESIGN ADHESIVELY BONDED DOWELS IN ACCORDANCE WITH BRIDGE DESIGN MEMORANDUM DM0408.

3.3 PROVIDE AND INSTALL ANCHORAGES IN ACCORDANCE WITH THE REQUIREMENTS OF THE SUPPLEMENTAL SPECIFICATION FOR ADHESIVELY BONDED ANCHORS AND DOWELS. USE AN ADHESIVE BONDING SYSTEM THAT HAS A MINIMUM BOND STRENGTH OF 1.5 KSI. FIELD TESTING OF THE ANCHORAGES IS NOT REQUIRED.

3.4 SEE PLANS FOR DETAIL OF ADHESIVELY BONDED DOWELS.

10.0 PAY ITEM 2028605, CULVERT EXTENSION PREPARATION:

10.1 FOR EXTENSIONS OR MODIFICATIONS, CONTRACTOR SHALL REMOVE AND DISPOSE OF PORTIONS OF THE EXISTING STRUCTURE THAT INTERFERE WITH CONSTRUCTION OF THE NEW STRUCTURE. REMOVAL AND DISPOSAL WORK SHALL BE PAID FOR UNDER THE CULVERT EXTENSION PREPARATION PAY ITEM. THE CONTRACTOR SHALL REPLACE OR REPAIR TO THE SATISFACTION OF THE ENGINEER ANY AND ALL PORTIONS OF THE EXISTING STRUCTURE THAT ARE DAMAGED BY CARELESSNESS AND OR NEGLIGENCE WITHOUT CHARGE TO THE SCDOT.

10.2 ALL COSTS OF FURNISHING & PLACING ADHESIVELY BONDED DOWELS IN EXISTING MATERIAL SHALL BE INCLUDED IN THE UNIT PRICE BID FOR THE CULVERT EXTENSION PREPARATION PAY ITEM FOR CULVERT EXTENSIONS.

10.3 CONTACT SURFACE OF EXISTING CONCRETE TO BE CLEAN, FREE OF LAITANCE, AND INTENTIONALLY ROUGHENED TO AN AMPLITUDE OF ¼" AT ALL LOCATIONS CONNECTED TO NEW CAST IN PLACE CONCRETE.

11.0 PAY ITEM 722****, PC BOX CULVERT NOTES:

11.1 ALL PRECAST CONCRETE SHALL BE MINIMUM CONCRETE CLASS 5000 (fc'=5000 psi)

11.2 FOR PRECAST BOX CULVERTS, SEALANT BETWEEN SECTIONS TO CONFORM WITH LATEST EDITION OF THE SCDOT STANDARD SPECIFICATIONS OF HIGHWAY CONSTRUCTION.

11.3 END OF PRECAST CULVERT SHALL BE CAST SQUARE, AS SHOWN ON CULVERT DESIGN DRAWING, IN LIEU OF A TONGUE OR GROOVED END, AND THE HOLES FOR ADHESIVELY BONDED DOWELS, SHALL BE CAST OR DRILLED IN SHOP. CARE SHALL BE TAKEN TO PREVENT CAST OR DRILLED HOLES FROM EXPOSING MAIN REINFORCING STEEL TO RESIN ANCHOR HOLE. CONTRACTOR TO DETERMINE DIAMETER AND DEPTH OF HOLES BASED ON RESIN ANCHOR MANUFACTURE RECOMMENDATIONS FOR DEFORMED BAR SIZE DESCRIBED IN RESIN ANCHOR NOTES OR IN PLANS.

11.4 ALL COSTS OF FURNISHING & PLACING ADHESIVELY BONDED DOWELS IN NEW PRECAST SECTIONS SHALL BE INCLUDED IN THE UNIT PRICE BID FOR THE PC BOX CULVERT PAY ITEM FOR PRECAST BOX CULVERT SECTIONS.

12.0 PAY ITEM 7011402 CONCRETE FOR STRUCTURES CLASS 4000 (CULVERT):

12.1 ALL CAST IN PLACE CONCRETE SHALL BE MINIMUM CONCRETE CLASS 4000 (f'c = 4000 psi).

12.2 ALL COSTS, BOTH DIRECT AND INDIRECT, NECESSARY TO PERFORM THE WORK AS CALLED FOR ON CULVERT SHEETS INCLUDING ADDITION OF HOLES FOR UTILITIES, RCP , MANHOLES AND CATCH BASINS ARE TO BE INCLUDED IN THE UNIT PRICE BID FOR CONCRETE FOR STRUCTURES CLASS 4000 (CULVERT), UNLESS OTHERWISE NOTED.

12.3 CONSTRUCT WEEP HOLES AND FRENCH DRAINS, SEE PARAGRAPH 702.4.19 OF THE LATEST EDITION OF THE SCDOT STANDARD SPECIFICATIONS.

12.4 CONCRETE CUT-OFF WALLS SHALL BE CAST TO A DEPTH SUFFICIENT TO REST ON HARD AND OR COMPACTED MATERIAL. THE MINIMUM DEPTH BELOW BOTTOM SLABS AND FOOTING SHALL BE 2 FEET, AND MAY BE INCREASED AT THE DISCRETION OF THE SUPERVISING ENGINEER OR DESIGNER.

12.5 FOR EACH CUT-OFF WALL, NON REINFORCED CONCRETE HAS BEEN ADDED TO THE CAST IN PLACE CONCRETE CLASS 4000 QUANTITIES SHOWN BASED ON THE LENGTH, DEPTH, AND THICKNESS SHOWN ON THE PLANS. IF THE ENGINEER DETERMINES THAT A DEEPER CUT-OFF WALL IS REQUIRED, ADDITIONAL QUANTITIES SHALL BE ADDED TO THOSE SHOWN. ADDITIONAL FORM WORK AND WORKMANSHIP, IF NECESSARY, SHALL BE APPROVED BY THE ENGINEER AND PAID FOR AS EXTRA WORK.

13.0 PAY ITEM 7031100 REINFORCING STEEL FOR STRUCTURES (ROADWAY):

13.1 REINFORCING STEEL SHALL EITHER CONFORM TO AASHTO M55 OR M225 GRADE 65 FOR WELDED WIRE FABRIC OR CONFORM TO ASTM A 706 DEFORMED LOW-ALLOY STEEL, AND SHALL BE A MINIMUM GRADE 60 FOR ALL OTHER REINFORCEMENT. FOR CIP CONSTRUCTION, USE MINIMUM #4 BARS.

13.2 CONTRACTOR SHALL CUT AND OR BEND ANY REINFORCING BARS AS NECESSARY TO CARRY OUT WORK AS CALLED FOR ON THE STRUCTURE SHEETS. IF NOT INCLUDED IN THE DESIGN PLANS, A REBAR SCHEDULE SHOWING THE SPECIFIC INFORMATION INDICATED IN THE BENDING DETAILS AND REINFORCING STEEL SCHEDULE, SHALL BE SUBMITTED TO SCDOT RPG STRUCTURES ENGINEER FOR REVIEW. ALL REBAR SCHEDULES SHALL BE SUBMITTED TO THE SCDOT RPG STRUCTURES ENGINEER.

13.3 STEEL MANUFACTURING PROCESSES, INCLUDING APPLICATION OF COATINGS FOR THESE MATERIALS, MUST OCCUR IN THE UNITED STATES. COATING APPLICATION INCLUDES ALL PROCESSES WHICH PROTECT OR ENHANCE THE VALUE OF THE MATERIAL TO WHICH THE COATING IS APPLIED.

14.0 PAY ITEM 2021000 REMOVAL OF STRUCTURES AND OBSTRUCTIONS :

14.1 WHEN ABANDONED STRUCTURES ARE PRESENT THAT INTERFERE WITH THE CONSTRUCTION OF THE NEW CULVERT, CONTRACTOR SHALL REMOVE AND DISPOSE OR MODIFY THESE EXISTING STRUCTURES TO ACCOMMODATE CONSTRUCTION OF THE NEW CULVERT. REMOVAL AND DISPOSAL OR MODIFICATION WORK SHALL BE PAID FOR UNDER THE REMOVAL OF STRUCTURES AND OBSTRUCTIONS PAY ITEM. THE CONTRACTOR SHALL REPLACE OR REPAIR TO THE SATISFACTION OF THE ENGINEER ANY AND ALL RETAINED PORTIONS OF EXISTING STRUCTURES THAT ARE DAMAGED BY CARELESSNESS AND OR NEGLIGENCE WITHOUT CHARGE TO THE SCDOT.

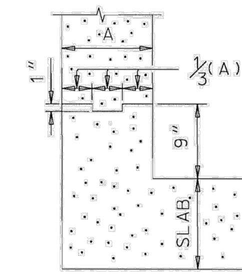

CONSTRUCTION JOINT DETAIL
NOT TO SCALE.
(MAKE MIDWALL OR INTERIOR WALL JOINTS SIMILAR WHERE APPLICABLE.)

THIS DRAWING IS NOT TO SCALE

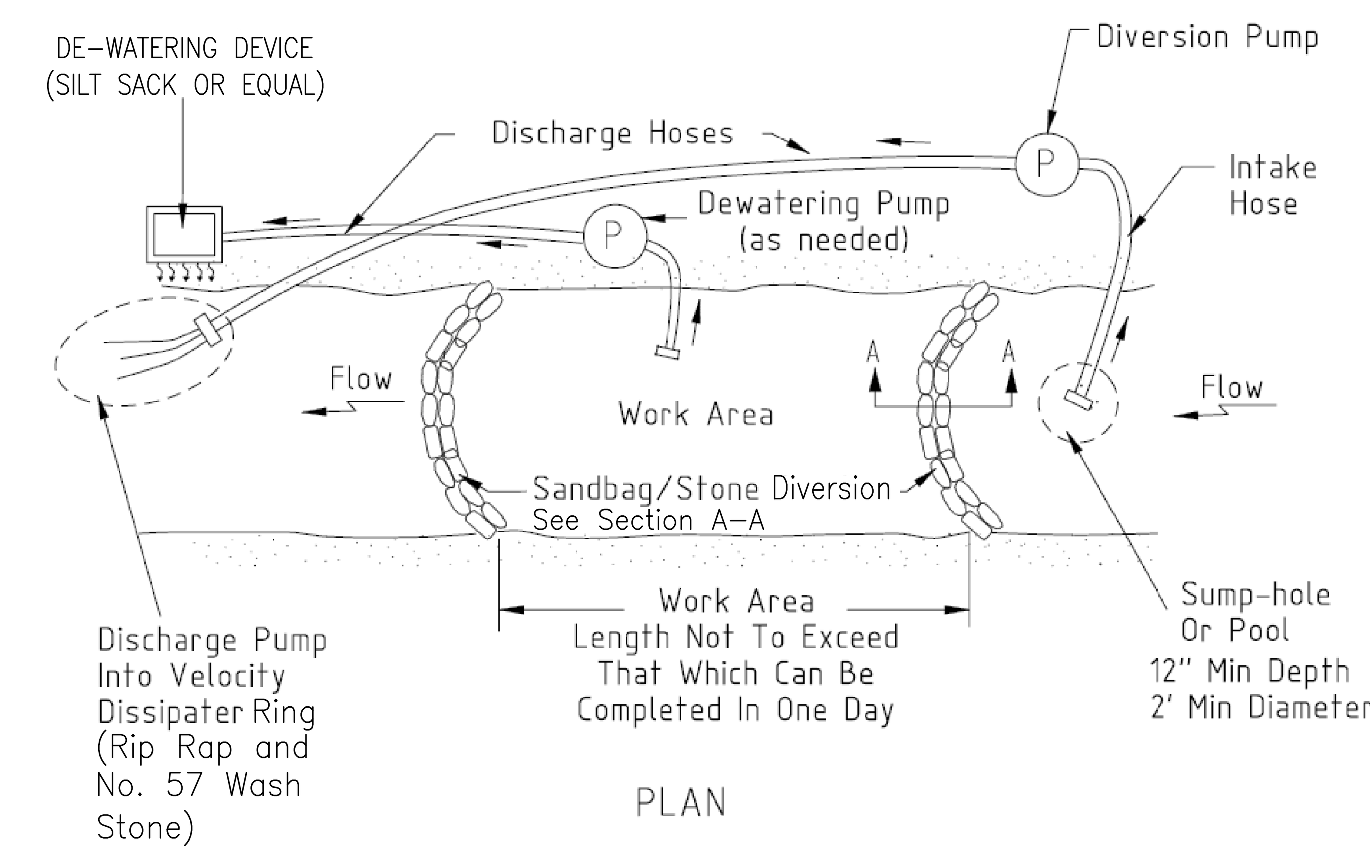

PLAN

NOTES:

1. PUMP AROUND TO BE USED WHEN REQUIRED AND IN SECTIONS ONLY DURING ACTIVE CONSTRUCTION.
2. CONTRACTOR SHALL COORDINATE W/CAROLINA WETLANDS PRIOR TO INITIAL SETUP AND USE OF PUMP.
3. SILT SACK SHALL BE SET ON A PALETTE FOR EASE OF REMOVAL.
4. PUMPS AND DE-WATERING DEVISES SHALL BE SET OUTSIDE/BEYOND TOP OF BANK. CONTRACTOR SHALL SAFEGUARD PUMPS AND DE-WATERING DEVICES DURING RAINFALL EVENTS.
5. ALL WORK SHALL BE WITHIN EASEMENT AREA OR TOWN PROPERTY.
6. WORK AREA SHALL BE RETURNED TO EXISTING CONDITION IMMEDIATELY UPON COMPLETION OF WORK.

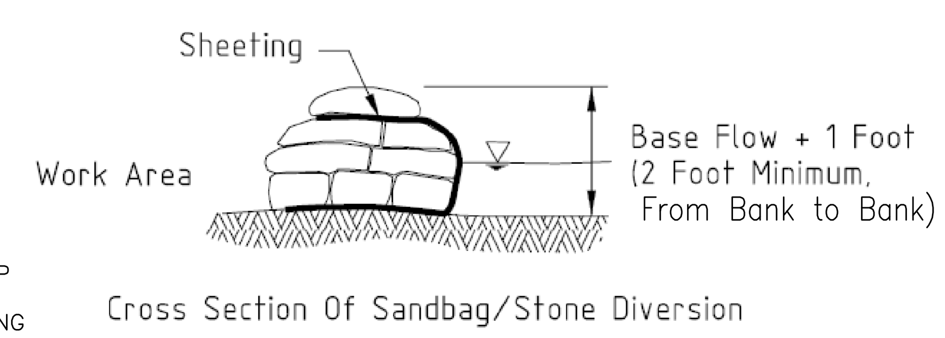

Cross Section Of Sandbag/Stone Diversion

SECTION A-A

PUMP AROUND DETAIL
N.T.S.

MINIMUM
ADDITIONAL REINFORCING STEEL AROUND HOLE FOR CATCH BASIN OR MANHOLE INSTALLED IN TOP SLAB OF CULVERT

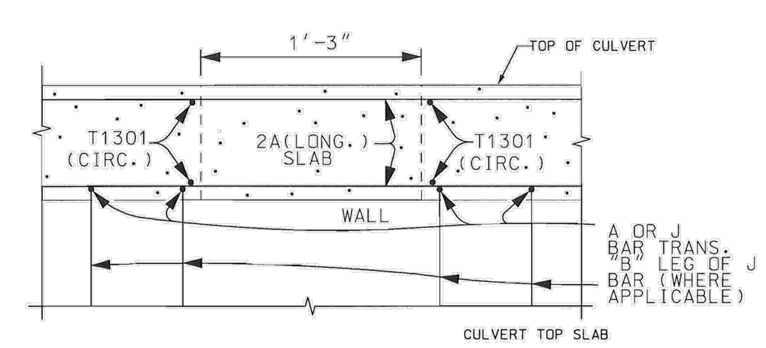

SECTION A
TOP SLAB CROSS SECTION

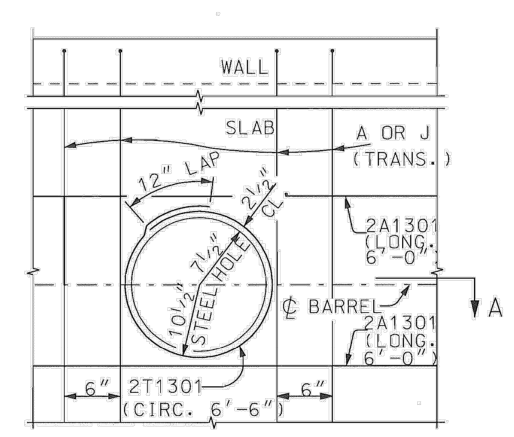

SECTION B
TOP SLAB PLAN

NOTE:
FOR HOLES NOT SHOWN, ON CIP CULVERTS AND EXTENSIONS, THE ENGINEER IS TO SET THE LOCATION OF THOSE HOLES IN THE FIELD. FOR HOLES NOT SHOWN, ON PRECAST CULVERT SECTIONS, THE ENGINEER IS TO SET THE LOCATION OF THOSE HOLES IN THE FIELD,AND TO NOTIFY THE PRECASTER AND THE ROAD DESIGN ROADWAY STRUCTURES GROUP COORDINATOR OF THE HOLE LOCATIONS BEFORE FABRICATION BEGINS. FOR BOTH PRECAST AND CIP CULVERT SECTIONS, THE HOLES IN THE TOP SLAB SHALL BE LOCATED ON THE CULVERT BARREL CENTERLINE. MAIN REINFORCEMENT SHOWN ON CULVERT DETAILS SHALL BE CUT TO A MAXIMUM OF 3"CLEAR OF OPENING. A OR J TRANSVERSE BARS ARE TO MATCH MAIN TRANSVERSE BARS IN BOTTOM OF TOP SLAB FOR CIP CULVERTS. FOR PRECAST CULVERTS, J BARS TO BE MINIMUM #16 BARS. PRECAST MANUFACTURER SHALL DETERMINE ANY ADDITIONAL REINFORCING REQUIRED BASED ON HOLE SIZE AND SECTION LENGTHS. BEND A BARS TO EXTEND 2'-0" INTO WALLS.

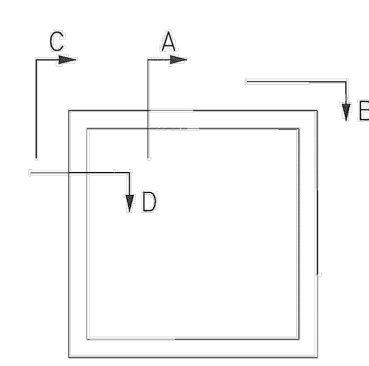

CULVERT CROSS SECTION

SEE STANDARD DRAWING 722-105-01 FOR ADDITIONAL NOTES AND DETAILS

MINIMUM
ADDITIONAL REINFORCING STEEL AROUND PIPES (36" MAXIMUM) INSTALLED IN THE SIDE WALL OF CULVERT

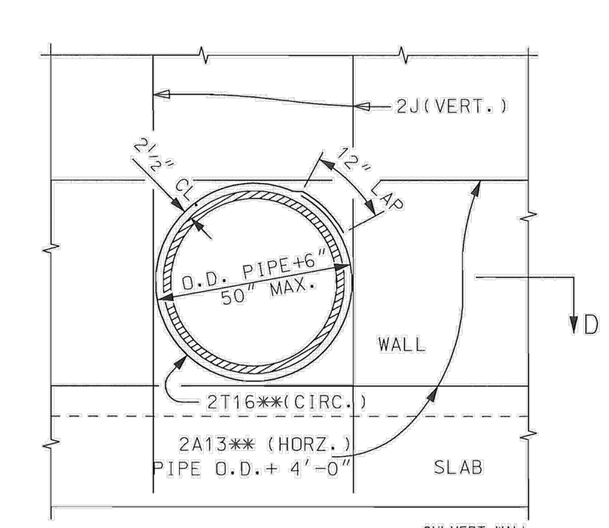

SECTION C
WALL SIDE VIEW

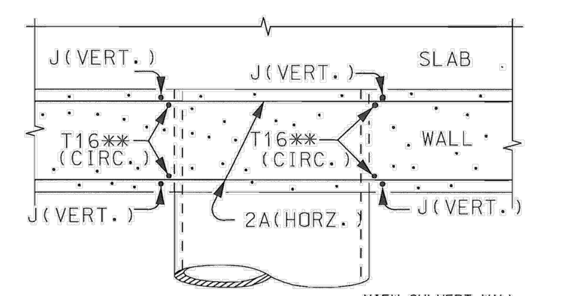

SECTION D
WALL CROSS SECTION

NOTE:
FOR PIPES NOT SHOWN, ON CIP CULVERTS AND EXTENSIONS, THE ENGINEER IS TO SET LOCATION OF THOSE PIPES IN THE FIELD. FOR PIPES NOT SHOWN, ON PRECAST CULVERT SECTIONS, THE ENGINEER IS TO SET LOCATION OF THOSE PIPESIN THE FIELD. AND TO NOTIFY THE PRECASTER AND THE ROAD DESIGN, ROADWAY STRUCTURES GROUP COORDINATOR OF THE PIPE LOCATIONS BEFORE FABRICATION BEGINS.
ALL PIPES ARE TO BE PLACED AND WRAPPED WITH TWO LAYERS OF TAR PAPER BEFORE THE SURROUNDING CONCRETE IS POURED.
VERTICAL J BARS ARE TO MATCH MAIN J BARS IN WALL FOR CIP CULVERTS. FOR PRECAST CULVERTS, J BARS TO BE MINIMUM #16 BARS. PRECAST MANUFACTURER SHALL DETERMINE ANY ADDITIONAL REINFORCING REQUIRED BASED ON HOLE SIZE AND SECTION LENGTHS.
THE STEEL ARRANGEMENT SHOWN HERE IS FOR PIPES IN PLACE AND FOR PIPES THAT ARE TO BE PLACED.
MAIN REINFORCEMENT SHOWN ON CULVERT DETAILS SHALL BE CUT TO A MAXIMUM OF 3"CLEAR OF OPENING.

THIS DRAWING IS NOT TO SCALE

REFERENCES

NATIONAL DOCUMENTS

SCDOT DOCUMENTS

RELATED DRAWINGS & KEYWORDS
722-105-01

PRECONSTRUCTION SUPPORT ENGINEER

SOUTH CAROLINA REGISTERED PROFESSIONAL ENGINEER NO. 8858 EDWIN SYLVESTER EARGLE, II

SIGNATURE

MARCH 3, 2008
DATE

#	DATE	CHK	DESCRIPTION
6			
5			
4			
3			
2			
1			
0	3/2008	DSO	GENERAL REVISIONS

SCDOT
SOUTH CAROLINA DEPARTMENT OF TRANSPORTATION
DESIGN STANDARDS OFFICE
955 PARK STREET
ROOM 405
COLUMBIA, SC 29201

STANDARD DRAWING
BOX CULVERT (MISCELLANEOUS DATA)

722-105-02
EFFECTIVE LETTING DATE MAY 2008

SOUTH CAROLINA LICENSED PROFESSIONAL ENGINEER No. 26505 CARLA MUSCARELLA 10/17/16

SEAL

SOUTH CAROLINA WOOLPERT, INC. No. C02990 CERTIFICATE OF AUTHORIZATION

COA

No.	DATE	REVISION

PROJECT No: 74840
DATE 04/04/16
DES. WLPRT
DR. VT
CKD. PAS

WOOLPERT

2000 Center Point Road
Suite 2200
Columbia, SC 29210
803.731.0261
FAX: 803.731.0132

MERRIFIELD STORM WATER IMPROVEMENTS
GREENVILLE COUNTY
SOUTH CAROLINA

BOX CULVERT DETAILS

SHEET NO.
C306