GREENVILLE COUNTY
LAND DEVELOPMENT REGULATIONS

APRIL 2018

Greenville County

GREENVILLE COUNTY
LAND DEVELOPMENT REGULATIONS

TABLE OF CONTENTS

ARTICLE 1 GENERAL PROVISIONS 6
1.1 Authority 6
1.2 Intent 6
1.3 Jurisdiction 6
1.4 Severability 7
1.5 Conflict with Other Laws, Ordinance, or Regulations 7
1.6 Administration 7

ARTICLE 2 DEFINITIONS 10

ARTICLE 3 GENERAL SUBDIVISION REQUIREMENTS 16
3.1 Review Criteria 16
3.2 Project Processing 16
3.3 Major Subdivisions (Preliminary Plan Procedures) 16
3.4 Final Plat Procedures 19
3.5 Minor Subdivisions 27
3.6 Family Subdivisions Exception 30
3.7 Simple Plats 31
3.8 Recording Plats of Record 31

ARTICLE 4 GENERAL SURVEY REQUIREMENTS 33
4.1 Intent 33
4.2 Surveys Requiring State Plane Coordinate Reference 33
4.3 Surveys Exempt from Geodetic Control Monument Tie 33
4.4 Standards 33
4.5 Electronic Submission Standards and Procedures 34
4.6 General Survey Standards Background 36

ARTICLE 5 STREET CLASSIFICATION AND DESIGN STANDARDS 38
5.1 Street Classification 38
5.2 Design Standards for Public Streets 39
5.3 Private Roads 52
5.4 Unpaved Private Drives 54

ARTICLE 6 ROADWAY CONSTRUCTION STANDARDS 57
6.1 Construction Plan Submittal Requirements 57
6.2 Construction Plan Review/Inspection Fees 58
6.3 Minimum Specifications for All Roadways 58
6.4 Construction Standards for Public Roads 59
6.5 Testing and Inspections 69

ARTICLE 7 WATER SUPPLY/SEWAGE DISPOSAL REQUIREMENTS 77
7.1 Availability of and Approval for Essential Services 77

7.2 Water and Sewer Systems 77
7.3 Extension of Public Water and Sewer Systems 78
7.4 Private Water and Sewer Systems 78
7.5 Water or Sewer Systems Not Connected To Municipal or Service Providers 79

ARTICLE 8 GENERAL DESIGN STANDARDS 80
8.1 Intent 80
8.2 Minimum Lot Size 80
8.3 Minimum Lot Frontage (Access to Lots) 80
8.4 Newly Created Through Lots 80
8.5 Flag Lots 80
8.6 Reserve Strips 81
8.7 Building Setbacks 81
8.8 Access and Circulation 83
8.9 Street Connectivity 84
8.10 Traffic Calming 85
8.11 Half Streets 85
8.12 Reservation of Right-of-Way on County Roads 85
8.13 Conformity to the Major Thoroughfare/Transportation Plans 85
8.14 Clear Sight Distance 86
8.15 Street Names 88
8.16 Street Signs and Markers 89
8.17 Easements 89
8.18 Sidewalks and Crosswalks 90
8.19 Mailboxes 92
8.20 Entrance Walls 94
8.21 Screening 95

ARTICLE 9 TRAFFIC IMPACT STUDIES 97
9.1 Intent 97
9.2 Study Requirements 98
9.3 Responsibility for Mitigation 99
9.4 Mitigation Alternatives 100
9.5 Staff Approval 100

ARTICLE 10 GENERAL DEVELOPMENT STANDARDS FOR INDUSTRIAL, COMMERCIAL, MULTI-FAMILY RESIDENTIAL AND MIXED-USE DEVELOPMENT 101
10.1 Intent 101
10.2 Industrial Design Standards 101
10.3 Commercial Design Standards 103
10.4 Multifamily Design Standards 105

ARTICLE 11 CLUSTER DEVELOPMENTS 108
11.1 Intent 108
11.2 General Provisions 108
11.3 Preliminary Plans 108
11.5 Ownership and Maintenance 109
11.6 Final Plats 110
11.7 Existing Subdivisions 111

ARTICLE 12 PROVISIONS FOR GROUP DEVELOPMENT 112
12.1 Application 112
12.2 Review Process 112
12.3 Group Development Plan Submittal Requirements 112
12.4 Revisions to Approved Plans 113
12.5 Design Standards 113

ARTICLE 13 TRADITIONAL NEIGHBORHOOD DEVELOPMENT 115
13.1 Intent 115
13.2 Applicability 115
13.3 Design Standards 115
13.4 Street Development Standards 117
13.5 Parking Lots 120
13.6 Landscaping and Screening Standards 120
13.7 Stormwater Management 121
13.8 Utilities 121
13.9 Ownership and Maintenance of Public Use lots, Greenways and Civic Use Areas 122

ARTICLE 14 MANUFACTURED HOUSING 124
14.1 Single Site Location and Development Standards 124
14.2 Park Site Development Standards 127

ARTICLE 15 RV PARKS 131
15.1 General Standards 131
15.2 Parking and Storage of Vehicles 131
15.3 Recreational Vehicle Park Site Development Standards 131
15.4 Design Standards 132

ARTICLE 16 AREA SPECIFIC DESIGN GUIDELINES 133
16.1 Scuffletown Rural Conservation District Site Plan Review 133

ARTICLE 17 STORMWATER MANAGEMENT 136
17.1 Areas Subject to Flooding 136
17.2 Stormwater Design Manual 136
17.3 Drainage System Design 136

ARTICLE 18 PLANNED OFFICE DISTRICT (POD) 143
18.1 Intent 143
18.2 Application Procedure 143
18.3 Site Plan Requirements 143
18.4 Effect of Site Plan Approval 144

ARTICLE 19 NEIGHBORHOOD COMMERCIAL DISTRICT (NC) 145
19.1 Intent 145
19.2 Application Procedure 145
19.3 Site Plan Requirements 145
19.4 Effect of Site Plan Approval 146

ARTICLE 20 PLANNED DEVELOPMENT DISTRICT 147
20.1 Intent 147

20.2 Application Procedure 147
20.3 Final Development Plan Requirements 147
20.4 Effect of Final Development Plan Approval 148

ARTICLE 21 FLEXIBLE REVIEW DISTRICT 149
21.1 Intent 149
21.2 Application Procedure 149
21.3 Final Development Plan Requirements 149
21.4 Effect of Final Development Plan Approval 150

APPENDIX A. SUBDIVISION JURISDICTION MAP 151

APPENDIX B. ACCEPTABLE PLANT MATERIAL LIST 152

APPENDIX C. SPECIFICATIONS FOR ALTERNATIVE TRAFFIC CALMING MEASURES 158

APPENDIX D. WATER QUALITY GUIDELINES FOR COMMERCIAL & COMMUNITY FACILITY PARKING LOTS 167

APPENDIX E. LOW IMPACT DEVELOPMENT FEATURES WITHIN THE CENTERS AND CORRIDORS…..……...169

APPENDIX F. MISCELLANEOUS DESIGN DETAILS..... 177

APPENDIX G. DENSITY BONUS FOR LOW IMPACT DEVELOPMENT PROGRAM (STORMWATER BANKING PROGRAM) 189

GREENVILLE COUNTY, SOUTH CAROLINA
LAND DEVELOPMENT REGULATIONS
2016 EDITION

ARTICLE 1 GENERAL PROVISIONS

1.1 Authority

Pursuant to the authority granted to it under Title 6, Chapter 29, Article 7 of the South Carolina Local Government Comprehensive Planning Enabling Act of 1994, the Greenville County Council does hereby adopt Land Development Regulations to provide for the harmonious development of the county; coordination of streets within subdivisions with other existing or planned streets or with other features of the comprehensive development plan; adequate open spaces for traffic, recreation, light, and air; protection of the floodplain and floodways; and for a distribution of population and traffic which will create conditions favorable to the health, safety, and welfare of the general public.

Hereafter, no plat of a subdivision of land within the area described in Section 1.2 below shall be filed or recorded until it has been submitted to and is approved by the Community Planning, Development and Public Works Department and such approval is entered in writing on the plat by the Assistant County Administrator for Community Planning, Development, and Public Works or authorized representative. The provisions of these regulations shall not apply to subdivision plat maps which, prior to the adoption of regulations governing the subdivision of lands, were recorded in the office of the Greenville County Register of Deeds.

1.2 Intent

The public health, safety, economy, good order, appearance, convenience, morals, and general welfare require the harmonious, orderly, and progressive development of land within the municipalities and counties of the State of South Carolina. In furtherance of this general intent, the regulation of land development by counties is authorized for the following purposes, among others:

A. To encourage the development of economically sound and stable counties;
B. To assure the timely provision of required streets, utilities, and other facilities and services to new land developments;
C. To assure the adequate provision of safe and convenient multimodal traffic access and circulation in and through new land developments;
D. To assure the provision of needed public open spaces and building sites in new land developments through the dedication or reservation of land for recreational, educational, transportation, and other public purposes; and,
E. To assure, in general, the wise and timely development of new areas, and redevelopment of previously developed areas in harmony with the comprehensive plans of counties.

The intent and purposes described in this Section are fully set forth in the guidelines and requirements appearing in the regulations as adopted by County Council.

1.3 Jurisdiction

The Land Development Regulations adopted by the Greenville County Council shall apply to all new subdivisions located in all unincorporated areas of the county as shown on the Official Subdivision

Jurisdiction Area Map on file in the Community Planning, Development and Public Works Department. The area defined above shall hereinafter be referred to as the subdivision jurisdiction area. (See Appendix A)

1.4 Severability

If any section, paragraph, subdivision, or provision of these regulations shall be judged invalid, such judgment shall apply only to that particular section, paragraph, subdivision, or provision and the remaining sections of these regulations shall remain valid and effective.

1.5 Conflict with Other Laws, Ordinance, or Regulations

Wherever the requirements made under authority of these regulations impose higher standards than are required in any other statute, local ordinance, or regulations, the provisions of these regulations shall govern. Wherever the provisions of any other statute, local ordinance, state or federal regulations impose higher standards than are required by these regulations, the provisions of such statute, local ordinance, or regulations shall apply.

1.6 Administration

1.6.1 Submission of plan or plat for Planning Commission review

The deadline for the submission of any plans or plats to the Planning Commission for review and approval or denial is in accordance with the subdivision review calendar.

A. The Planning Commission shall take action on any accepted plans or plats in accordance with the subdivision review calendar, unless otherwise agreed upon by both the applicant and the Commissioners. Failure by the Planning Commission to act upon any plans or plats accepted for review and approval or denial, within sixty (60) days of acceptance, shall constitute approval of the plans or plats. The sixty (60) day time limit may be extended by mutual agreement between the Chairperson of the Planning Commission and the applicant.

   Any action or decision designated to the Community Planning, Development and Public Works Department staff, pursuant to the South Carolina Local Government Comprehensive Planning Enabling Act of 1994, shall be reviewed and approved or denied within sixty (60) days of receipt to the Community Planning, Development and Public Works Department. Failure by the Planning Commission to take action or make a decision within sixty (60) days shall constitute approval of the plan or plat. The sixty (60) day time limit may be extended by mutual agreement by Community Planning, Development and Public Works Department staff and the applicant.

B. Upon approval or denial of any plans or plats submitted to the Planning Commission, the Community Planning, Development and Public Works Department staff shall issue a letter outlining the action taken and procedures for appeal or reconsideration, if applicable.

1.6.2 Appeals

Any authorized action or decision made by the Community Planning, Development and Public Works Department staff may be appealed to the Planning Commission within fifteen (15) days. Any appeals will be scheduled for the next available Planning Commission meeting for consideration.

An appeal from the decision of the Planning Commission must be made within thirty (30) days after actual notice of the decision pursuant to the provisions of Title 6, Chapter 29 of the Code of Laws of South Carolina, as amended.

1.6.3 Variances

Whenever, in the opinion of the Planning Commission, the strict application of the requirements contained in these regulations would result in substantial or excessive difficulties, hardships, or injustices, the Planning Commission may modify such requirements so that the applicant is allowed to develop his property in a reasonable manner. The public interests of the county and its citizens are to be protected and the general intent and spirit of these regulations will be preserved. Community Planning, Development and Public Works Department staff will solicit comments from the Subdivision Advisory Committee regarding the variance request. These comments shall be presented to the Commissioners for their review, use, and consideration. All affected county departments shall accept variances granted by the Planning Commission. Variances approved by the Commission shall be binding for all affected county departments.

The Planning Commission may authorize, upon written appeal, such variance from the terms of this ordinance as will not be contrary to the public interest where, owing to special conditions, a literal enforcement of the provisions of this ordinance would result in unnecessary hardship or peculiar and exceptional practical difficulties. A variance from the terms of this ordinance may be granted by the Commission upon a finding that one or more of the following exist:

A. The variance requested is the minimum variance that will make possible the legal use of the land.
B. Owing to special conditions, a literal enforcement of the provisions of this ordinance would result in unnecessary hardship or peculiar and exceptional practical difficulties.
C. The variance requested will be in harmony with the general purpose and intent of this ordinance and will not be injurious to the neighbor or otherwise detrimental to the public welfare.

After the Planning Commission has denied a request for a variance, an applicant must wait 6 months from the date of the denial before applying for the same variance on the same property.

1.6.4 Amendments

A public hearing before County Council is required before the adoption of any amendment to these regulations, in accordance with County Council Rules on Public Hearings.

1.6.5 Interpretation

In interpreting the regulations expressed in this document, they shall be considered as the minimum provisions for the protection of the health, safety, and welfare of the general public.

This document is not intended to cover all situations that may be encountered. National, state, and local design standards should be referenced when the criteria is not covered in this document.

1.6.6 Effective Dates

The Land Development Regulations shall take effect on the date of adoption.

1.6.7 Violations and Penalties

The owner or agent of the owner of any land to be subdivided located within the jurisdiction of the Planning Commission who transfers or sells such land by reference to, or exhibition of, or by other use of a plat or subdivision of such land before such plat has been approved by the Planning Commission and recorded in the office of the County Register of Deeds shall be subject to the penalties prescribed in S.C. Code Ann. Section 6-29-1190. The description by metes and bounds in the instrument of transfer or other document used in the process of selling or transferring land shall not exempt the transaction from such penalties.

Nothing contained herein shall prevent the county from taking such other lawful action as is necessary to remedy any violation of these regulations.

ARTICLE 2 DEFINITIONS

For the purpose of these regulations, the following definitions shall be used. Words used in the present tense include the future; the singular number includes the plural number; the plural number includes the singular number. The word "shall" is mandatory.

Alley - A minor, permanent private service-way which is used for secondary vehicular access to the back or the side of properties which otherwise have primary vehicular access to a public street.

Area Plan - A plan for a specific, defined area of any size of Greenville County. An Area Plan is considered an amendment to the County Comprehensive Plan in order to address specific needs limited to: growth management, land use, economic development, and/or natural resource management.

Authorized Representative – For each submittal, the specific, single project agent to whom all questions, comments, and discussion will be directed during processing. The Authorized Representative will be responsible for attending pre-submittal meetings, the Subdivision Advisory Committee meeting, the Planning Commission, and all other meetings, as applicable.

Block - A piece or parcel of land entirely surrounded by public streets.

Building Setback Line - A line establishing the minimum allowable distance between the nearest portion of any building excluding steps, gutters, and similar fixtures, and the property line when measured perpendicular thereto.

Community Center Area – The social center of the Traditional Neighborhood Development (TND), containing a central public space and the most intense and mixed development.

Cul-de-sac - A street having one end open to traffic and being permanently terminated by a vehicular turnaround.

Dedication – A deeded, prescriptive, or acknowledged proof by maintenance activity of the right of way, unless otherwise stated, grants an easement to the traveling public and does not convey the fee.

Easement - A grant, by the property owner of a portion of land, for use by the public, a utility, a corporation, or person for specified purposes. Drainage and utility easements are intended to be reciprocal easements among the property owners and not a dedication to the County.

Emergency Vehicle – Any vehicle designated and authorized to respond to an emergency. Such vehicles can be part of a governmental agency, but also include those run by charities, non-governmental organizations and other commercial companies.

Eyebrow - The arch of a cul-de-sac covering the outer ridge of a tangent street section.

Family Subdivision - The division of land into two or more new lots at one time or over a period of time where conveyance may only be to members of the immediate family of the property owner.

A. **Immediate Family** -Any person who is a natural or legally defined offspring, stepchild, spouse, sibling, aunt, uncle, niece, nephew, grandchild, grandparent, or parent of the owner.

Fire Apparatus Access Way – An access way that provides fire apparatus access from a fire station to a facility, building, or portion thereof.

Flood Insurance Rate Map (FIRM) – An official map of a community, on which the Department of Homeland Security-FEMA, National Flood Insurance Program, has delineated both the areas of special flood hazard and the risk premium zones applicable to the community.

Group Commercial Development - A development consisting of two (2) or more commercial, retail, office or industrial buildings located on two or more parcels, developed with a common plan for the protection, maintenance and improvement of the parcels and stormwater facilities, and with access easements and rights in one or more of the parcels and governed by an owner's association or developed as a horizontal property regime.

Half Street – A portion of the width of a street, usually along the edge or boundary of a development, where the remaining portion of the street is to be provided by the development of an adjacent property.

Highway - A street or traffic way serving as and designated as a State or United States route.

Homeowners Association, (also known as HOA, Owners Association and Property Owners Association, POA), in this ordinance will be referred to as Homeowners Association – A private or non-profit association which is organized by the developer and/or owners of a development in which individual owners share common interests in open space and/or facilities and are in charge of preserving, protecting, managing, and maintaining the common property and enforcement of the protective covenants, easements and /or restrictions.

Land Development - The changing of land characteristics through redevelopment, construction, subdivision into parcels, condominium complexes, apartment complexes, commercial parks, shopping centers, industrial parks, mobile home parks, and similar developments for sale, lease, or any combination of owner and rental characteristics.

Link - A segment of road between two intersections or from an intersection to a cul-de-sac/stub-out. This includes road segments leading from the existing adjoining road(s).

Lot - A parcel of land designated by number or other symbol as part of a legally approved and recorded subdivision or as described by metes and bounds and recorded in the office of the Greenville County Register of Deeds.

Lot, Corner - A lot abutting upon two or more streets at their intersection or upon two parts of the same street forming an interior angle of less than 135 degrees. The point of intersection of the street lines or of the street lines as extended is the corner.

Lot, Double Frontage - A lot, other than a corner lot, abutting upon two or more streets. A corner lot shall be considered having double frontage if it has access on three or more sides or shows access to two streets parallel to one another.

Lot, Flag - An interior lot, located behind another lot, which has a narrow strip of land not less than 20 feet in width for its entirety that runs along one side of the front lot to provide access to the public street. A panhandle or pipe stem lot is considered a flag lot.

Lot, **Through** - A lot which has access to more than one Public or Private Road.

Low Impact Development (LID) – An approach to land development (or re-development) that works with nature to manage stormwater as close to its source as possible. LID employs principles such as

preserving and recreating natural landscape features, minimizing effective imperviousness to create functional site drainage that treats stormwater as a resource rather than a waste product.

Major Subdivision – The division of land into 7 or more lots at one time, or over a period of time, or any subdivision of land that includes the construction of new street or new right of way, extension of a public water or sewer system or the installation of drainage improvement to facilitate residential lot construction. Applications for Major Subdivisions must follow the schedule for submittals of Preliminary Subdivision for Planning Commission review and approval.

Manufactured Home Park - Any lot or parcel of land maintained, offered, or used for parking of more than three manufactured homes used or intended to be used for living or sleeping purposes regardless of whether or not a charge is made for such accommodations.

Minor Subdivision – The division of land into 6 or less lots, at one time or over a period of time, which does not require construction of a new street with new right of way, the extension of a public water or sewer system or the installation of drainage improvement to facilitate residential lot construction. Applications for Minor Subdivisions must follow the Summary Plat process.

Mixed Use Development - A development containing two (2) or more different uses on one or more parcels such as, but not limited to, residential, office, retail, public, or entertainment that are integrated within the development and are reliant on common facilities such as vehicular access roads or drives and stormwater facilities.

Mountainous Road – A roadway having a slope greater than 11%.

Multi-Dwelling Development - A residential development consisting of three (3) or more single-family, two-family or multi-family dwellings located on a parcel or parcels of land, not further subdivided into separate lots, and having yards, courts, or other facilities in common, with shared access easements and governed by a horizontal property regime.

Non-through Street – A street designed to be permanently closed with an approved turnaround at the end.

Open Channels - All overland diversions, existing and proposed, which convey storm flows through the site.

Parcel – An individually taxable piece or portion of land.

Parking Lot - Land area or facility for parking or storage of motor vehicles used for business, commerce, industry or personal use.

Planned Commercial Center - Two or more commercial, retail or office uses planned and developed as a unit on one parcel related in location and size and are reliant on common facilities such as vehicular access roads or drives and stormwater facilities.

Planned Design Area Manual - A document prepared by the Community Planning, Development and Public Works Department staff, and made available to the general public, to illustrate the design standards of a Planned Design Area.

Planned Design Area Map - A document prepared by the Community Planning, Development and Public Works Department staff, and made available to the general public, to define the jurisdiction of a

Planned Design Area. The document delineates the boundary wherein the standards of a Planned Design Area are applied.

Planned Residential Development (Formerly Group Residential) - A residential development consisting of three (3) or more single-family, two family or multi-family dwelling units located on individual lots but having yards, courts, or other facilities in common and governed by an owner's association.

Plat – A map prepared by a Registered Land Surveyor in accordance with the County's Regulations and Statutes of the State, that represents a tract or multiple tracts of land, and shows the boundaries and locations of individual properties and streets.

The following are definitions intended to distinguish between different categories of plats:

A. **Final –** A plat of all or a portion of a subdivision in substantial conformance with the approved preliminary plan, in accordance with the County's regulations and the statutes of the State.

B. **Simple -** A plat that shows a division of a parcel with no more than two (2) lots.

C. **Summary –** A plat that shows a division of a parcel into multiple lots that does not require construction of a Public, Private Road or Unpaved Shared Drive.

Plat of Record - An accurate graphical representation, neatly lettered and properly dimensioned, report of a survey made by a Registered Land Surveyor of a finite piece of land property, including pertinent data and appropriate information.

Preliminary Plan – A tentative plan showing a proposed subdivision design submitted to the Planning Commission for preliminary consideration and approval.

Private Access Easement - A privately owned and maintained easement that provides vehicular access to each lot.

Private Road - Any right of way, road, street, drive, or means of vehicular access to properties that is not dedicated to or maintained by any Governmental agency.

Public Utility - Any agency which, under public franchise or ownership, provides the general public with electricity, gas, heat, steam, communication, rail transportation, water, sewage collection, or other services and all equipment and structures necessary to provide such services.

Recreational Vehicle (RV) - A vehicular unit, which is designed as a temporary dwelling for travel, recreational, and vacation use, and which is self-propelled, mounted on, or pulled by another vehicle. Examples include but are not limited to a travel trailer, camping trailer, truck camper, motor home, fifth-wheel trailer, or van.

Recreational Vehicle Park (RV Park) - Any lot of land upon which two or more recreational vehicle sites are located, established, or maintained for occupancy as temporary living quarters for purposes of recreation or vacation. This term does not include any premises on which unoccupied recreational vehicles, whether new or used, are parked for the purposes of inspection, sale, storage, or repair.

Reserve Strip - A strip of land adjacent to a public street or similar transportation right of way which has been reserved for the purpose of controlling access to the public way.

Residential Area - As it relates to Traditional Neighborhood Development (TND), the less intense portion of the development primarily reserved for residences.

Right of way - A strip of land that is dedicated for public use or private use to accommodate a street, trail, waterline, sanitary sewer, power line, gas line, rail line, and/or other public utilities or facilities.

A. **Public** – A right of way dedicated, deeded or granted for public use and under the control of a public agency.

B. **Private** – A right of way intended for vehicular traffic providing access to lots or units over a common parcel, primarily by the owners or occupants of the common parcel, and necessary service and emergency vehicles, but from which the public may be excluded and which are not maintained by a public agency.

Riparian Buffer – a natural or vegetated area adjacent to or bordering a body of water such as a stream, lake, pond or other water course through which stormwater runoff flows in a diffuse manner so that the runoff does not become channeled and which provides for the infiltration of pollutants while protecting the water body.

Roadway - That portion of a street intended for the use by vehicular traffic.

Roadway Culverts - Structures installed under the roadway which convey flows from existing creeks, live streams, or drainage channels that originate upstream of the site and carry offsite flows through the site.

SCDHEC - South Carolina Department of Health and Environmental Control

SCDOT - South Carolina Department of Transportation.

Service Provider – A legally constituted governmental jurisdiction such as a municipality or water and/or sewer district that maintains the infrastructure and provides a service using that infrastructure within a defined service area.

Street - A dedicated and accepted portion of right of way for multimodal traffic. See Article 5 for hierarchy of streets.

Street Width - The shortest distance between the lines delineating the traveling surface of a street. For streets with curbs, the width is measured from the edge of pavement.

Structure - Anything constructed or erected which requires permanent location. For the purpose of this Ordinance, "structure" does not include items such as walkways, driveways, utility lines, flagpoles, air conditioning compressors, or pump houses or wells; or mailboxes, light standards, gatehouses, or bus shelters located in street right-of-ways. This definition is not intended to apply to "stormwater structure" as used in this ordinance.

Stub street - A street that is designed to extend to the property line with a temporary barricade and has the intent to be extended to provide for future access and connectivity.

Subdivider - Any person, individual, firm, partnership, association, corporation, estate, trust, or any other group or combination acting as a unit, dividing or proposing to divide land so as to constitute a subdivision. This definition includes any authorized agent of the subdivider.

Subdivision - All divisions of a tract or parcel of land into two or more lots, building sites, or other divisions for the purpose, whether immediate or future, of sale, lease, or building development, and includes all division of land involving a new street or change in existing streets, and includes re-subdivision which would involve the further division or relocation of lot lines of any lot or lots within a subdivision previously made and approved or recorded according to law; or, the alteration of any streets or the establishment of any new streets within any subdivision previously made and approved or recorded according to law, and includes combinations of lots of record; however, the following exceptions are included within this definition only for the purpose of requiring that the local planning agency be informed and have a record of the subdivisions:

A. The combination or recombination of portions of previously platted lots where the total number of lots is not increased and the resultant lots are equal to the standards of the governing authority;
B. The division of land into parcels of five acres or more where no new street is involved and plats of these exceptions must be received as information by the planning agency which shall indicate that fact on the plats;
C. The combination or recombination of entire lots of record where no new street or change in existing streets is involved; and
D. The division of land by order of probate court or master in equity based on settlement of an estate.

SWPPP – Stormwater Pollution Prevention Plan generally means a site-specific written document that (1) identifies potential sources of stormwater pollution at the construction site; (2) describes stormwater control measures to reduce or eliminate pollutants in stormwater discharges from the construction site; and (3) identifies procedures the operator will implement to comply with the terms and conditions of this general permit.

Tract – An area, parcel, site, piece of land or property which is the subject of a development action.

Traditional Neighborhood Development – A compact mixed use neighborhood that incorporates a system of relatively narrow, interconnected streets with sidewalks and alleys and offers a mixture of housing types and prices, civic or community buildings, commercial uses, and squares and greens, with pedestrian oriented design features and a recognizable center.

Undeveloped Area – Portions of a project platted for specific, community uses, such as, but not limited to: stormwater detention or water quality, common area, undeveloped area, or open space. These areas shall be identified with letters, rather than numbers, and shall be held in HOA ownership or dedicated to another agency, as applicable. Plan notes shall identify their specific purpose and ownership. These areas are not to be used as buildable lots with individual ownership.

Wetlands –Those areas that are inundated or saturated by surface or groundwater at a frequency and duration sufficient to support, and that under normal circumstances do support, a prevalence of vegetation typically adapted for life in saturated soil conditions. Wetlands generally include swamps, marshes, bogs, and similar areas.

Zoning - Any existing zoning ordinance of Greenville County, South Carolina, or its municipalities.

ARTICLE 3 GENERAL SUBDIVISION REQUIREMENTS

3.1 Review Criteria

To further the intent set forth in Section 1.2, the following shall apply for all developments reviewed under this Article.

Submitted developments may be approved if they meet all of the following criteria:

- Adequate existing infrastructure and transportation systems exist to support the project;
- The project is compatible with the surrounding land use density;
- The project is compatible with the site's environmental conditions, such as but not limited to, wetlands, flooding, endangered species and/or habitat, and historic sites and/or cemeteries.

3.2 Project Processing

3.2.1 Incomplete or inaccurate submittals

Incomplete, inaccurate, or erroneous process submittals as of the submittal deadline will not be accepted or processed and will be required to schedule a pre-submittal meeting. It is highly recommended that project submittals are made prior to the deadline so that any deficiencies may be identified with ample time to address them. Projects that are not complete on the submittal day can expect delays.

3.2.2 Authorized Representative

Each submittal must identify on the application form an Authorized Representative, including phone number and email address. All communication regarding the project will be directed to that person. In the event that the Authorized Representative is not available, an alternate may be identified to Subdivision Administration staff.

3.2.3 Application Inactivity

Subdivision applications that are inactive for a period of six months on the applicant's part shall be closed and a new application and fee shall need to be submitted for approvals. After five months of inactivity, staff shall send a reminder letter to the applicant.

3.3 Major Subdivisions (Preliminary Plan Procedures)

3.3.1 Intent

Preliminary Plan**s** are the first step in the Major Subdivision process, where a parcel of land is requested to be divided into seven (7) or more lots with a private or public road. The Preliminary Plan must be brought before the Subdivision Advisory Committee and the Planning Commission. The final step in this process is Final Plat, where legal lots are created, roads accepted, and financial securities are taken for unfinished work.

3.3.2 Pre-Submittal Meeting

Pre-Submittal Meetings are highly recommended, but not required unless an incomplete, inaccurate, or erroneous process submittal is not accepted. This is to identify the proper process and ensure that the applicant can meet approval criteria, therefore streamlining reviews. Pre-Submittal Meetings for subdivisions are scheduled with Subdivision Administration in accordance with the Subdivision Activity Calendar.

3.3.3 Submittal Requirements

Application for preliminary approval of a subdivision plan shall be submitted to the Community Planning, Development and Public Works Department according to the Subdivision Activity Calendar available at the Department office or on the County website. A copy of the preliminary plan of the subdivision shall be such as to meet the minimum requirements contained herein. Upon confirmation that an application is complete and using the proper process, the applicant will be provided with signs to be posted in prominent places on or adjacent to the subject property as directed by staff. At the time the developer posts the required subdivision notice signs, the location of the centerlines of any proposed new roads which intersect the existing road will be staked and flagged. Signs should remain posted until the Planning Commission meeting and removed by the applicant within 48 hours of Planning Commission action.

After acceptance and posting, the preliminary plan is submitted to the Subdivision Advisory Committee (SAC) for their review and recommendations. The Authorized Representative will ensure that all comments made at the Subdivision Advisory Committee meeting are fully addressed on the plan during an identified revision period. It is this revised plan that is submitted for the Planning Commission's review and approval, hold, or denial.

To help offset the cost to the county of processing a subdivision plat, a filing fee shall be paid with the application for preliminary plan approval. All fees must be paid in full at the time of application. The fee schedule can be found on the Subdivision Administration website.

Any non-conditional revisions made after Planning Commission action shall be submitted for review with a review fee.

3.3.4 Plan Requirements

A preliminary plan shall be submitted to the Community Planning, Development and Public Works Department for review in a scale of not less than 1 inch to 100 feet and shall include the following. Maximum plat size shall be 24" X 36". (See example and checklist on Subdivision Administration website)

A. A narrative explaining how items brought up at the Pre-Submittal meeting were addressed, as applicable.
B. A preliminary lot layout and a GIS survey of the property of the proposed subdivision showing bearings and distances, along with the following note:
   "Undersigned engineer/surveyor acknowledges that these are GIS-based boundaries, which will be fully surveyed using state plane coordinates at Final Plat."
C. The preliminary plan shall conceptually show all future phases of development so that road, infrastructure, and stormwater management connections and relationships may be considered during review. Projects that return as a subsequent phase, without the benefit of phasing review as a preliminary plan, shall apply for a preliminary plan revision to allow the comprehensive review.
D. The name of the subdivision (which shall remain consistent through all processing) ; the owner or owners and current address; the name of the engineer, surveyor, landscape architect, land planner, who prepared the plan;; the names of the adjoining subdivisions or property owners; and location of the proposed subdivision.
E. The location, right of way widths, and inventory numbers of all streets and roads adjacent to any property proposed for subdivision and whether they are public or private.

F. A vicinity map showing the relationship of the property submitted for approval with adjoining property and to all streets or roads existing within 1000 feet of any part of the property to be approved. In addition the property will be located on this sketch from at least one highway or well-known road or intersection by indicating the mileage to the nearest tenth to the property.
G. The location and size (if known) of sanitary and storm sewers, location and size (if known) of water mains, and other utilities immediately adjacent to the tract. Also, the names of the owners of the utilities should be included in the preliminary plan. If water mains and sewers are not on or adjacent to the tract, indicate the direction, distance to, and size of nearest accessible mains. If public sewage facilities are proven infeasible, the developer shall contact SCDHEC for septic tank approval information. If the area or any part of the area being platted lies within a sewer or water district, this district shall be shown clearly on the preliminary plan.
H. Topographic contour intervals, not greater than 12-feet, shall be overlaid on the preliminary lot layout.
I. The location of watercourses, live streams, marshes, known wetlands, floodplains and floodways, wooded areas, water impoundments, existing cemeteries and burial grounds, houses, barns, garages, or storage sheds and other significant features on the land proposed for approval.
J. Areas held in common ownership, or areas that are required for stormwater or other infrastructure facilities (mailbox areas, detention ponds, conservation areas, etc.), shall be labeled "Undeveloped Area – A, B, C, etc." and identified as to use, responsibility, and ownership in plan notes.
K. The location, width of all street rights of way, centerline road radii, and other areas proposed to be dedicated to the public or intended for public use and proposed lot lines and approximate lot dimensions.
L. Scale, north arrow, legend and date.
M. Total area stated in acres of the land proposed for subdivision and a table showing the lot number and the approximate area of each proposed lot.
N. Where zoning exists within Greenville County including municipalities, all preliminary subdivision plans shall show the existing zoning classification for the area being platted and all abutting property. The preliminary plan shall comply with the requirements of the Zoning Ordinance in effect in the area proposed for a subdivision. If the area or any part being platted will not meet the minimum requirements of the Zoning Ordinance, and the developer's design requires the area to be rezoned, the developer must make an application for a zoning change with the appropriate authority. The application for rezoning must be submitted to the appropriate legislative body and have received at least second reading approval prior to the submittal of a preliminary subdivision plan.
O. The location of the Cluster Box Units

3.3.5 Plan Review

The SAC is made up of representatives of the following organizations as well as others which the Department may request:

A. Emergency Management Service Representative
B. Governing Fire District
C. Greenville County Engineering and Maintenance Division
D. Greenville County Floodplain Management Division
E. Greenville County Land Development Division
F. Greenville County School District
G. Greenville Water and/or Appropriate Water System

H. MetroConnects: Sustainable Wastewater Solutions and/or Appropriate Sewer Subdistrict
I. REWA – Renewable Water Resources
J. SCDHEC – Department of Health and Environmental Control
K. Environmental Quality Control and Health Department
L. SCDOT – South Carolina Department of Transportation

The SAC will meet at least 3 days prior to the Planning Commission meeting. The Authorized Representative is required to attend the SAC meeting and the Planning Commission meeting as noted on the application for preliminary approval. Any interested citizens may attend this meeting for information about the subdivision. Upon review of the subdivision by the SAC, a recommendation is made to the Planning Commission. Based on the recommendation of the SAC, and the Community Planning, Development and Public Works Department staff, the Planning Commission may approve, deny, amend or hold the proposed subdivision plan. Such action on the application must occur within 60 days of the date of submittal. An application may be held beyond 60 days by mutual agreement between the applicant and Planning Commission/Staff.

Refer to Section 1.6.1 regarding Planning Commission approval, denial or appeals process.

As authorized by the Planning Commission, preliminary approval of the subdivision plan shall be noted on the plan and certified by the Assistant County Administrator for Community Planning, Development, and Public Works or his/her authorized representative. Also noted shall be the date on which the Planning Commission granted preliminary approval.

Upon approval of the preliminary plan by the Planning Commission, the subdivider may proceed to comply with the specific requirements of these regulations and the preparation of the final subdivision plat. Approval of a preliminary plan shall not constitute approval of the final subdivision plat. Preliminary approval shall constitute approval of the proposed widths and alignments of streets and dimensions and shapes of lots.

All preliminary approvals shall be valid for a period of time not to exceed two (2) years unless a one (1) year extension of time is applied for and granted by Subdivision Administration. After the initial two (2) year period, the developer may apply for a one (1) year extension, not to exceed five (5) total extensions.

An electronic copy of the preliminary plan shall be made available within five (5) working days by the Community Planning, Development and Public Works Department staff for the affected public agencies as well as the Authorized Representative.

3.4 Final Plat Procedures

3.4.1 Intent

Final Plats are the ultimate step to create legal lots where a preliminary plan has been previously approved by the County, where seven (7) or more lots are created with a private or public road. Final Plats are reviewed to ensure compliance with the approved preliminary plan. Public dedications may be required and surety may be required for all planned infrastructure improvements.

3.4.2 Submittal Requirements

The Final Subdivision Plat shall not exceed 24" x 36" overall dimensions. If the Final Subdivision Plat is drawn in two or more sections, each section shall be accompanied by a key map showing the location of each section.

The membership rights and obligations related to the undeveloped areas in a subdivision shall be described in covenants running with the land. All undeveloped areas shall be maintained by the homeowners association or property owners association within the subdivision or other agency, as identified on the final plat. The establishment of the association must take place prior to the final plat approval.

No deed restrictions or restrictive covenants shall stipulate lower standards than the minimum required herein or within the Greenville County Zoning Ordinance. Covenants must be provided and recorded along with the final plat.

Electronic Submission of Final Plats:

A. All plats subject to the requirements specified herein and submitted for recording, shall be accompanied by an electronic copy, as specified by the Electronic Submission Standards and Procedures described below.
B. The only use of the electronic information submitted will be for the anonymous inclusion into the Greenville County GIS system. Disclaimers and limiting statements may be placed in electronic submissions, provided such disclaimers do not direct liability to the County or create indemnification by the County to the party submitting electronic files.
C. Submitted files shall contain, at a minimum, parcels, rights of way, ground control points, street centerlines, easements, lot numbers, lot dimensions, road names, and easement types if these elements are shown on the submitted, printed document. All undeveloped areas shall be identified with letters and notes stating their purpose and maintenance responsibility.

3.4.3 Financial Security Requirements

The developer has the option to complete the required infrastructure improvements and have them accepted by Greenville County before recording a final plat. In order to be permitted to record a final plat, the developer also has the option to provide financial security instruments in lieu of completing the infrastructure improvements upon meeting the minimum requirements as defined in Article 6. When a financial security is permitted, the developer through his Authorized Representative shall submit to Subdivision Administration the actual bid from the contractor or a cost estimate prepared by the developer's engineer and verified by the County Engineer or his/her authorized representative. These estimates shall cover the full cost of all remaining infrastructure improvements. The financial security amount shall be based on one hundred and twenty-five percent (125%) of the cost estimates as approved by the County at the time financial security is accepted, or a minimum of $20,000, whichever is greater.

A developer submitting a final plat for approval (whether an individual, partnership, or corporation) may execute his own Financial Security using one of the following three methods:

A. An irrevocable letter of credit from an acceptable FDIC accredited bank or institution.
B. Cash to be deposited in a County escrow account properly securing the amount of the Financial Security.

C. A certified check to be deposited in a County escrow account properly securing the amount of the Financial Security.

All financial security requests shall be accompanied by a fee.

For the purpose of this subsection, appropriate lending instruments shall be limited to an FDIC accredited bank or institution. Letters of Credit must be issued by a Financial Institution with a full service branch located within the State of South Carolina, at which the Letter of Credit may be presented for payment. The Letters themselves may be processed from the bank's main office located in another city or state. All instruments and agreements used under this Article are subject to the approval of Subdivision Administration. Subdivision Administration may reserve the right to require developers to execute such agreement and instruments in furtherance of this Article as are approved as to form by Subdivision Administration.

A. Failure to complete required infrastructure:

1. If it is documented that the developer of record has failed to complete all of the required infrastructure improvements in two individual subdivisions (not two phases of a single subdivision) the Subdivision Administrator or his/her authorized representative is not permitted to approve a financial security on any subsequent subdivisions. Approval of such financial securities must be granted by the Planning Commission. As a condition of such approval, the Planning Commission may approve the financial security as submitted or may require additional financial security up to one hundred and forty percent (140%) of the estimated cost of the infrastructure improvements as submitted by the developer's engineer and agreed to by the staff of the County Land Development Division at the time the financial security is accepted. The additional 15% of financial security are reserved to provide reimbursement to County for staff time for project management services required to complete the infrastructure in the subdivision in the event the developer fails to perform.
2. If a developer, who has been required to provide an increased financial security amount, successfully completes two separate subdivisions under the increased financial security provisions without the need to draw the financial security the developer will be allowed, on future projects, to only meet the one hundred and twenty-five percent (125%) of the cost estimate requirement and no longer requires approval from the Planning Commission. For purposes of these Regulations, and this Article "Financial Security" shall refer to a County approved instrument and arrangement undertaken by and at the expense of the developer, established to provide a financial guarantee in favor of the County. In the event of default or failure by the developer, the Financial Security shall be applied so as to provide funds for the completion of all required infrastructure improvements.

3.4.4 Financial Security Period

All financial security instruments shall be posted with Subdivision Administration for and on behalf of the County of Greenville. The initial financial security will be in effect for one year (renewable for a maximum of 3 one-year extensions), subject to conditions as specified by County staff.

3.4.5 Financial Security Reductions and Credit for Completed Work

Developers may apply for reduction in the amount of the financial security posted based on completed infrastructure improvements. In order to qualify for Credit for Completed Work, a significant portion of any one of the following items must be installed in accordance with the approved plans: storm drainage; base; asphalt; curb and gutter; or sidewalk.

Developers should be advised that they must ensure relevant work is complete and in accordance with the approved construction plans prior to making a reduction in the financial security. Greenville County permits only one site-visit by County staff to verify quantities are correct. The purpose of the site-visit is to verify the cost estimate is adequate to complete the remaining work.

In no case may the result of reduction recalculations allow the financial security for each final plat to go below $20,000.00.

3.4.6 Constructing Required Improvements Under Financial Security

After Subdivision Administration has approved a final plat and accepted financial security to ensure completion of required improvements, the developer shall complete such improvements within 4 years of the initial financial security acceptance date for each final plat.

If the improvements are not progressing in accordance with County requirements, the proper authority shall notify Subdivision Administration and recommend that the developer be notified to complete the required work within a specified period of time.

When the required infrastructure has been installed and accepted by the County Engineer or municipal authority, the developer shall provide a copy of the acceptance letter from the appropriate utility agencies and municipal agency (if applicable) along with the required affidavits and dedications to Subdivision Administration. At which time the Subdivision Administrator will proceed to complete acceptance as outlined in Section 3.4.12 Dedications.

3.4.7 Sidewalk Construction Bond – Optional

If at the time of road acceptance all sidewalks are not completed, and at the discretion of the Subdivision Administrator, the developer may post a separate sidewalk construction cash surety to Subdivision Administration in the amount of 125% of the cost for Greenville County to bid out for completion of the sidewalks. The duration of the surety will be up to three (3) years. With the posting of the surety and fulfilling all other requirements for roadway/infrastructure improvements, the roads may be accepted into the County inventory for maintenance.

The developer and/or the builders of the individual lots will be responsible for the completion of the remaining sidewalk with the construction of the structures of the lots. At the end of two (2) years it is the developer's responsibility to ensure that all the remaining sidewalk shown on the construction plans are installed. If no effort is made to complete the sidewalk after the two year notice by the end of the third year the developer will be considered in default and the funds will be drawn so that the sidewalk may be completed by Greenville County.

3.4.8 Land Development Division Action

Following notification to Subdivision Administration pursuant to Section 3.4.6, the Subdivision Administrator or his/her authorized representative shall then, after consultation with Land Development Inspection staff:

A. Release the Financial Security instrument; or
B. Call for completion of the required improvements within a specified period of time; or
C. Allow the Financial Security to be extended for an additional year (up to 4 years total); or
D. Proceed to enforce collection on the Financial Security instrument.

If the extension is within the first 4 years, the County Engineer or his/her authorized representative shall only review to verify that quantities are correct. If for unforeseen circumstances the

Subdivision Administrator agrees to extend beyond 4 years, prior to granting an extension, the developer shall submit a cost estimate of the remaining work to the County Engineer or his/her authorized representative, who shall review cost estimates and work to be completed to ensure that the security is adequate to cover the remaining work if it were bid out by Greenville County. If the security amount is not sufficient to cover the remaining work, the developer will be required to provide an additional amount of financial security. All financial security requests shall be accompanied by a fee.

3.4.9 Financial Security Administration

The developer is responsible for maintaining adequate financial securities. Subdivision Administration shall enforce this responsibility through the administration and management of the following tasks:

A. **Financial Security Renewal Notices**

1. Generated by the Subdivision Administrator or his/her authorized representative
2. Will be mailed 3 months prior to security term expiration
3. Indicate the due date (45 days prior to Security Term Expiration)
4. Set forth requirements for security release/return
5. Obtain and maintain Developer/Builder contact information for County Inspection Staff overseeing the work being financially secured

B. **Financial Security Renewal Warnings**

1. Will be mailed 30 days prior to Security Term Expiration
2. Mailed certified under the signature of the Subdivision Administrator or his/her authorized representative
3. Reference date of original renewal notice and missed deadline for providing the renewal
4. Alert Developer/Builder that the County of Greenville will initiate the process of collecting the Financial Security if a renewal is not received by certain date

C. **Financial Security Release/Return**

Financial Securities must be kept current and in effect until such time a final inspection is performed, outstanding items are addressed, and the proper authority makes recommendation for final acceptance of the project to the Subdivision Administrator.

3.4.10 Failure to Complete Infrastructure Improvements

A. At the time of Financial Security Renewal, if the improvements indicated on the approved plans are not constructed, completed, installed or accepted as required, if the developer fails to renew the Financial Security before completion of improvements and acceptance of the project by the County Engineer or his/her authorized representative, or if the developer has failed to respond to the Financial Security Renewal notices, the Subdivision Administrator or his/her authorized representative shall declare the Financial Security funds to be forfeited and begin collection of the Financial Security funds.
B. Unless good cause is shown as to the default, no building or other permit shall be issued to the developer in the subdivision during any period in which the developer is in violation of the approved plans or the Land Development Regulations relating to the subdivision.
C. If the developer fails to cure any default or present compelling reason why no default should be declared, the Subdivision Administrator or his/her authorized representative shall declare the Financial Security funds to be forfeited and begin collection of the Financial Security funds.

The funds shall be placed in an appropriate escrow or agency account subject to the direction of the Assistant County Administrator for Community Planning, Development, and Public Works or his/her authorized representative, and shall be held for the benefit of the subdivision infrastructure improvements. The County may complete, or have completed, the subdivision improvements to the extent practicable with the available Financial Security funds. This may be accomplished by applying the remaining Financial Security funds to the construction of the improvements. This provision shall not be construed to require the County to fund subdivision infrastructure improvements.

D. If prior to completion of the infrastructure improvements, a new developer or successor developer acquires ownership of or development rights to a subdivision deemed to be in default according to this subsection, the new developer is required to submit a new Financial Security according to the provisions of Section 3.4.3 to beginning work on the infrastructure improvements. The new Financial Security shall be in an amount sufficient to guarantee the completion of the infrastructure improvements indicated on the approved plans after recalculation of costs in order to allow for the deteriorating condition of the subdivision infrastructure improvements and/or any inflated or increased costs of constructing the improvements.

E. If the Financial Security funds have been drawn by the County prior to the new or successor developer purchasing or acquiring development rights in the defaulted subdivision, the County may assign its rights in the Financial Security funds held by the County to the new or successor developer if the new or successor developer submits a new Financial Security as provided in Section 3.2.2. All infrastructure costs in excess of the original Financial Security fund amount will be the responsibility of the new or successor developer.

3.4.11 Plat Requirements

A. The title of each final plat shall contain the following information: subdivision name as identified on the preliminary plan, name of owner and his address, location as to county and state, the date or dates the survey was made, a numerical scale, a graphic scale, name, address, registration number, and with the seal and signature of the S.C. Registered Land Surveyor who prepared the plat.

B. The scale of the final plat shall be such that new addresses and tax map numbers for each lot may be added legibly, post-approval.

C. Final Plat(s) shall be accompanied by digital files submitted in accordance with the provisions in Article 4, referenced as - General Survey Standards.

D. There shall appear on the Final Plat a certificate by the S.C. Registered Land Surveyor making the survey stating the origin of the information shown on the map including deeds and any recorded data shown thereon. The error of linear closure shall be 1:10,000. Any lines on the map that were not actually surveyed must be clearly indicated and a statement included revealing the source of information. The required certifications can be found on the Subdivision Administration webpage.

E. Every Final Plat shall contain the following specific information:

1. Accurately positioned north arrow coordinated with any bearings shown on the plat. Indication shall be made as to whether the north index is true, magnetic, or grid. A scale of at least 1 inch to 100 feet is required.
2. The final plat shall show sufficient data to determine readily and reproduce accurately on the ground the location, bearing, and length of every lot line, easement line, boundary line, and other property boundaries.

3. Where a boundary line is formed by a curved line, the curved line will be defined in a curve data chart to include the radius, delta, arc length, and the long chord with the chords' bearing and distance. The curve may also be defined as a traverse of chords around the curve.
4. The names of adjacent landowners and lot, block, and subdivision designations shall be shown where they have been determined and verified by the surveyor.
5. All obvious and apparent rights of way, watercourses, utilities, roadways, cemeteries and burial grounds and other such improvements shall be located and undeveloped areas and easements provided. Unless specific instructions are made requiring the digging up of or uncovering of buried utilities, the location of the utilities shall reflect the marked locations as indicated by an underground utility locator service or the respective utility provider.
6. If the area of land parcels is shown, the area will be computed to the nearest one hundredth of an acre or to the nearest square foot.
7. All new or re-established corners shall be:

    a. Metal, concrete, or other durable material and shall be detectable with conventional instruments for finding ferrous or magnetic objects;
    b. No less than 1/2 inch in diameter for metal corners and 4 inches in diameter for concrete;
    c. No less than 24 inches in length;
    d. If the corner location falls on pavement, concrete, or other impervious material where one of the above cannot be placed, it is permissible to use nails, spikes, scribes, etc. in or on the surface.

8. All boundary monuments shall be in place prior to the signing, sealing and issuance of the Final Plat.
9. In the absence of a specific engineering stormwater plan as a minimum, 5 foot drainage and utility easements shall be established along all side and interior rear property lines; 10 foot easements established along exterior boundary of the subdivision unless adjoining property owners have established easements.
10. A note shall be added to the plat that states "This plat shall follow the requirements of the final subdivision development plan."
11. If applicable, the base flood elevation (BFE) delineation and area of special flood hazard, as defined in the Greenville County Flood Damage Prevention Ordinance, must be shown on the Final Plat prior to recording, along with the lowest floor elevation chart for any lot upon which a *structure* may be located in or immediately adjacent to the area of special flood hazard.
12. Proposed road names shall be added for approval.

Water lines and hydrants must be installed and in working order prior to roadways being built, final plat recorded and combustible products being allowed on site. A model home may be constructed if there is a hydrant within 600 linear feet and a fire truck can get within 150 feet. A statement of approval from the respective fire department shall be submitted to support the model home construction.

3.4.12 Dedications

The County or other public authority shall not accept, lay out, open, improve, grade, pave, or light any street; or authorize the laying of water mains, sewers, connections, or other facilities or utilities in any street within the unincorporated area of Greenville County unless such street has been accepted and opened, or shall have otherwise received the legal status of a street for public use prior to the attachment of Greenville County's subdivision jurisdiction, or unless such street

corresponds in its location and lines with a street shown on a final plat. County Council may locate and construct or may accept any other street pursuant to County Ordinances and policies.

No subdivision shall be granted final (record) approval until the Subdivision Administrator or his/her authorized representative has received a notarized statement of dedication of streets and roads signed by each owner of the property to the effect that: (1) the subdivision plan shown on the preliminary plan or a reasonable revision thereof is made with his or their free consent and in accordance with their desires; (2) the dedication of streets or roads shown on the plat and the road dedication form is freely offered; (3) the property shown on the plat is not encumbered by a recorded deed of trust or mortgage or by a judgment rendered by any court. No dedications made pursuant to these requirements are effective unless the appropriate County official has expressly accepted the dedication.

Once this has been completed the Subdivision Administrator will send a written notice of acceptance and authorize the release of the remaining financial security.

3.4.13 Plan Review

The subdivider shall prepare a Final Plat upon fulfillment of the requirements of these regulations and the conditions of preliminary approval, if any. The Final Plat is the plat prepared for recordation and is referred to as the Final Plat. The Assistant County Administrator for Community Planning, Development, and Public Works or his/her authorized representative shall be empowered to certify for recording Final Plats of subdivisions. The Final Plat shall conform to all the standards of a Class "A" Land Survey as found in the Standards of Practice Manual for Surveying in South Carolina and in the Article.

3.4.14 Recording Procedures

The Final Plat must be recorded by the subdivider or his authorized agent in the office of the Greenville County Register of Deeds within seven days of the date of final approval by the Subdivision Administration staff or such approval shall be void.

Approval of the final plat and subsequent filing of such plat in the office of the Greenville County Register of Deeds shall be deemed an offer to dedicate all streets and other public areas shown on the plat. The final plat may not be recorded until roadway construction plans have been approved by the Land Development Division and a riding surface sufficient to support emergency vehicles has been constructed.

If street construction is not completed and approval is granted under the requirements of a financial security to ensure the completion of the streets, the developer shall then assume liability for damages that might be incurred by persons using the streets prior to the time that the streets are accepted by the county for continuous maintenance.

3.4.15 Revisions

If it should become necessary to revise a Final Plat that has been recorded, the subdivider shall have the registered land surveyor submit a revised final plat under the provisions of Sections 3.2.10 of these regulations. A filing fee must be paid at the time of recording. Revisions must be accompanied by digital files submitted in accordance with the provisions in this Article referenced as - General Survey Standards.

3.5 Minor Subdivisions

3.5.1 Application

Minor Subdivisions create lots where there is not a public or private road. These requests are brought before the Subdivision Advisory Committee, and may or may not go to the Planning Commission, depending on scope and size. Stormwater management may be a part of this process, as determined by the County. If the County determines that public or private road improvements are necessary for any reason, the applicant shall be redirected to the Preliminary Plan and Final Plat processes.

3.5.2 Summary Plat

The following minimum requirements have been established for all new Minor Subdivisions to ensure that the development of these lots will protect public health and safety and the orderly development of the surrounding area.

A. Each lot must conform to all applicable zoning regulations or Land Development Regulations in unzoned areas
B. Does not potentially obstruct the floodplain
C. Does not violate the intent of the Subdivision or Zoning Ordinances.
D. The subdivider shall design the lots to reflect the unique characteristics of the property by responding to its topography, wetlands, streams and forests and their relationships to adjoining properties and roads.
E. At the point where an applicant/property owner wants to exceed the criteria for a Minor Subdivision, the criteria for a Major Subdivision will apply for the entire project.
F. The parcel shall not be located in an existing subdivision (residential development) and it must be a previously platted lot of record.
G. In the unzoned area of the county, subdivisions not fronting on a public road may utilize the unpaved shared drive option to provide access.
H. It is the subdivider's responsibility to assure that the proposed lots meet the criteria for public water systems or sewage systems. Appropriate agency approvals must be provided to Subdivision Administration prior to approval of the Summary Plat.
I. It shall be the subdivider's responsibility to assure that the proposed lots have direct access from the lot to a right of way dedicated to public use.
J. It is the subdivider's responsibility to outline who will be responsible for meeting the stormwater management and erosion control requirements for lot development.

    1. If the subdivider's lots are for immediate development, appropriate stormwater permits are to be obtained prior to the approval of the plat.
    2. If the subdivider does not want to be responsible for the development of the lot(s), the following notes are to be added to the plat:

        a. There is no land disturbance associated with this summary plat.
        b. At the time of development each lot must obtain a Land Disturbance Permit through Land Development Division to address water quantity and quality.
        c. A building and land disturbance hold will be placed on each lot until a Land Disturbance Permit has been obtained.

K. If the new proposed lots have existing structures, zoning and encroachment shall be evaluated.
L. If the new proposed lots are zoned non-residential, stormwater will be required.

3.5.3 Submittal Requirements

Pre-Submittal Meetings are highly recommended and can be scheduled through the Public Portal up to the Friday before the meeting.

Such division of land must meet the minimum requirements of these regulations. Prior to receiving summary plat approval, it shall be determined that the lots have access to and frontage on a public right of way which has been accepted by the County or the South Carolina Department of Transportation (SCDOT) for continuous maintenance. If public water and sewer service are available, appropriate documentation of water and sewer service must be provided to the Community Planning, Development and Public Works Department by the agency approving such service. If using individual wells or septic tanks, contact SCDHEC for their procedures, and lots will be evaluated at the time of development. The County Engineer may require the developer to provide additional drainage information as required by state or federal law. The summary plat must contain the following information:

One electronic copy of the summary plat (see example and checklist on Subdivision Administration webpage) shall be submitted at a scale of at least 1 inch =100 feet. The summary plat shall not exceed 24" x 36" overall dimensions.

3.5.4 Plan Requirements

The summary plat must contain the following information:

A. Project narrative (separate document) addressing issues brought up at the Pre-Submittal Meeting
B. Street names and inventory numbers
C. Lot lines and building lines
D. Tax map number
E. Reservations, easements, floodplain drainage easements, public accesses or sites for other than residential uses with explanation of purpose
F. Legend, north arrow, graphic scale, date, and title
G. Location and description of monuments
H. Name, location, and ownership of adjoining property
I. Name of subdivider or owner
J. Name of SC registered land surveyor with embossed seal
K. Number of acres
L. Appropriate Right of Way required
M. Drainage easements shall be provided for all drainage outfalls from the roadway.
N. Area of Special Flood Hazard
O. Cemeteries and Burial Grounds
P. USGS Blue line streams with Greenville County buffer easements
Q. Appropriate notes regarding permitting needs for encroachments, land disturbance, and floodplain development as may be required by Article 17.

3.5.5 Plan Review

The Assistant County Administrator for Community Planning, Development and Public Works or his/her authorized representative shall sign and stamp summary plats of subdivisions on existing public or private streets without such subdivisions of land having first obtained preliminary approval from the Planning Commission.

The Subdivision Administrator may refer a Minor Subdivision to the Planning Commission for good cause. Good cause shall include, but not be limited to, any of the following factors:

A. The site include topographical, geologic, hydrologic/wetlands or their physical features which merit special consideration; or
B. The site contains sensitive wildlife habitat for endangered or threatened species; or
C. The site contains or is adjacent to significant archeological, architectural or historic sites/cemeteries or resources which merit protections.

The Subdivision Administrator also has the option to take a Minor Subdivision to the Planning Commission in order to determine whether or not the proposed subdivision is consistent with the goals and objectives of the Comprehensive Plan.

Summary plats will not be allowed to avoid the Land Development Regulations requirement of providing internal road access only. Showing future road right of way or stub outs is not permitted on a summary plat. If a summary plat is submitted to avoid providing new infrastructure or developing a Storm Water Pollution Prevention Plan (SWPPP) to new lots and is adjacent to a new subdivision, then the Subdivision Administrator may reject the submittal.

3.5.6 Stormwater Management

A. Stormwater Pollution Prevention Plan (SWPPP)
Subdividing a larger parcel into more than two parcels is considered a part of a larger common plan of development as defined by EPA if, when totally developed, the common plan will result in an accumulative land disturbance totalling one acre or more in area. Greenville County's stormwater ordinance requires stormwater management features if the entire common area's future development's impervious surfaces result in an increase of one cfs in runoff from the existing land pervious condition. Either condition requires the preparation of a SWPPP for the larger parcel by a registered design professional. Land Development Division staff can review the proposed long term development plans with the Subdivider to determine if a SWPPP is required or if a Simplified Land Disturbance permit will meet the intent of the Clean Water Act.

1. Optional Stormwater Management Procedure
In the case that the Land Development Division staff, in consultation with the Subdivider, determines that under normal conditions a SWPPP would have been required, for a division of land classified as residential, but the subdivider is unsure of the new parcels' layouts or does not want to provide a SWPPP for the entire parcel at the time of recording the summary plat, optional procedures can be followed. The subdivider must apply for a Zero Land Disturbance Permit, where there is no land disturbance associated with the subdividing and holds are placed on each lot until an appropriate Land Disturbance Permit is obtained through the Land Development Division. Otherwise, the subdivider must agree to stipulate on the sale of each parcel that the parcel must preserve 65% of the site in a forest or native condition and the impervious areas cannot exceed 10% of the entire site in order to meet water quality treatment and flow control requirements. The developed portion of the site must disperse runoff to native vegetation.

The subdivider must list this provision on the summary plat and the deeds. In this case the effected parcels will have holds placed on their building permits. As each subdivided parcel is sold and the new owner is prepared to develop the site the new owner must apply

for a residential lot grading permit to ensure that their planned development comply with the dispersion requirements.

Developments that cannot preserve 65% or more of the site in a forested or native condition may disperse runoff into a forested or native area as outline below:

a. The effective impervious surface of the area draining into native vegetation is 10%; and,
b. The development maintains ratios proportional to the 65% forested to native conditions and 10% effective impervious area. Examples of such ratios are:

% Native Vegetation Preserved (Min. Allowed)	% Effective Impervious (Max. Allowed)	% Lawn/Landscape (Max. Allowed)
65	10	35
60	9	40
55	8.5	45
50	8	50*
45	7	55*
40	6	60*
35	5.5	65*

*Where lawn/landscape areas are established on previous tilled soils and exceed 50% of the total site, these areas should be developed using Low Impact Development (LID) features.

If suitable forested area and/or the effective impervious areas cannot be met then a stormwater and erosion control plan must be developed by a registered design professional using LID features.

Individual lot LIDS are only allowed on up to 6 lots of proposed subdivisions unless approved by the director.

3.6 Family Subdivisions Exception

The Assistant County Administrator of Community Planning Development and Public Works or his/her authorized representative shall be permitted to sign plats of family subdivisions without such subdivision of land having first obtained preliminary approval. Such division of land must meet the minimum requirements of this subsection.

3.6.1 Submittal Requirements

Applications for Family Subdivisions must submit the following requirements for review and processing:

A. Plat, signed and sealed by a Professional Land Surveyor.
B. All plats for family subdivision shall be accompanied by an affidavit which shall be signed by the grantor and grantee under oath and penalty of perjury that identifies the family subdivision as being for the purpose of conveyance to a qualifying family member and identifying the receiving family member and the relations to the granter.
C. The property owner may be a family trust or family partnership so long as the trustees, beneficiaries and/or partners are composed only by members of the immediate family of the property grantor.

3.6.2 Minimum Requirements

The following minimum requirements must be met to ensure that the development of family subdivision lots will protect public health and safety and the orderly development of the surrounding area.

A. Each lot must conform to the required minimum lot size per the Greenville County Zoning Ordinance or Greenville County Land Development Regulations in unzoned areas, and/or as required by SCDHEC.
B. Each lot must have direct access from the lot to a right-of-way dedicated to public use.
C. In the unzoned area of the County, family subdivisions not fronting on a public road may utilize the unpaved shared drive option to provide access.
D. The proposed subdivision of lots may not obstruct or potentially obstruct the floodplain.
E. The proposed subdivision may not violate the intent of the Subdivision or Zoning Ordinances.
F. The parcel is not located in an existing subdivision (residential development).

3.6.3 Plat Requirements

A. Must comply with the Summary Plat.
B. If at the time of subdividing, the applicant does not wish to develop any of the lots, the following notes are to be added to the plat:

    1. This division is in accordance with the Family Subdivision Exemption.
    2. There is no land disturbance associated with this Family Subdivision.
    3. At the subdivider's request, this plat was not evaluated for future development (water availability, sewer availability, stormwater management requirements, floodplain requirements or encroachment requirements).
    4. At the time of development each lot must be evaluated for development and obtain a Land Disturbance Permit through Land Development Division to address water quantity and quality.
    5. A building and land disturbance hold will be placed on each lot until a Land Disturbance Permit has been obtained.

3.7 Simple Plats

In the case of summary plats which contain no more than two lots, the subdivider will not be required to submit the standard summary plat, but instead will be allowed to record the plat on a paper plat not to exceed 18 x 24 inches which contains as a minimum the information listed in Section 3.1.2. They are also exempt from meeting stormwater requirements.

3.8 Recording Plats of Record

Following review by the planning staff, survey plats (whether newly performed or historical) used for the purpose of indicating existing lots of record, may be recorded in the Register of Deeds office without requiring the owner to conform to the strict definition of a subdivision. These plats may not be used to create public or private roads or shared drives. Mortgage plats that are used for financial purposes only and are not to be used to transfer property from one owner to the other may also be recorded in the office of the Register of Deeds Office. Prior to recording, such plats must be submitted to Subdivision Administration for review by staff. Approved plats will be stamped with a statement that the plat does not create a new subdivision. This stamp will allow the plat to be recorded.

Exception: A plat of an individual lot of record may also be recorded in the Register of Deeds office if the plat has a certification from a registered land surveyor thereon which states, "This plat is not a subdivision as defined in the Greenville County Land Development Regulations, Article 2, Definitions." This survey is of an existing parcel of land and does not create a new road, change an existing road or alter any property lines.

ARTICLE 4 GENERAL SURVEY REQUIREMENTS

4.1 Intent

In order to maintain and improve County land records general survey standards must be followed. Land parcels subject to the requirements specified herein, are required to be referenced by South Carolina State Plane Coordinates, as defined in the SC Code of Laws, (The South Carolina Coordinate Act, as amended), either by Global Positioning System (GPS) Surveys or Terrestrial Surveys. Additionally, digital files shall be submitted in a standard format, in addition to standard printed documents required by this Article. These files consist of a copy of the CAD drawing containing all applicable layers and an ASCII text file describing the technical parameters and contact information for the CAD file (metadata).

4.2 Surveys Requiring State Plane Coordinate Reference

The following surveys require a State Plane Coordinate reference.

A. Any subdivision of eight (8) or more lots total aggregate including all phases and sections severed from parent parcel, at the time of this ordinance.
B. Boundary surveys of 25 or more acres total aggregate, unless exempted in Section B below.

4.3 Surveys Exempt from Geodetic Control Monument Tie

It is considered very desirable for surveyors to tie all surveys, whenever possible, to the state plane coordinate system. Nothing in these exemptions is intended to discourage surveyors from tying surveys to the state plane coordinate system.

The following surveys are exempted from state plane coordinate reference:

A. Re-tracement surveys of property in existing, platted subdivisions already recorded in the Greenville County Register of Deeds Office.
B. Boundary surveys located in unzoned areas of the County, of less than 100 acres total aggregate.
C. Any boundary survey more than one mile in distance as measured along public roads from a published geodetic monument.
D. Any survey not specified in Section 4.2A.

4.4 Standards

Survey requirements specified in this document are only for referencing land parcels to state plane coordinates. Boundary surveys shall be performed in accordance with the Standards of Practice Manual for Surveying in South Carolina, published by the State Board of Registration for Professional Engineers and Land Surveyors, unless more stringent requirements are specified herein. In so far as possible, Control surveys between geodetic monuments and property boundaries shall be extended from the nearest geodetic control monument(s). The specifications for horizontal control are as follows:

A. Global Positioning System (GPS) Surveys
   GPS procedures shall be followed to ensure survey grade compatibility with the nearest geodetic control monuments. Survey grade GPS receivers shall be used with a manufactures stated accuracy of at least ± 5 cm ± 2 ppm. It is realized that the nearest station may not always

be suitable for occupation by GPS because of obstructions, property owner permission or other reasons. The intent here is to make ties to network stations within 10 kilometers (6.214 miles) of the project and to establish new coordinates on property corners to a spatial accuracy of 0.2 feet.

B. Terrestrial Survey monument ties shall meet South Carolina Class A Standards.

C. Plat Requirements:

1. All Directions shall be referenced to South Carolina Grid.
2. Distances shall be ground distances (not Grid distances).

4.5 Electronic Submission Standards and Procedures

A. Drawings will be submitted as a drawing file in DWG or DXF format to the County's FTP site or on standard storage media approved by Greenville County. Such media include CD-ROM or DVD-ROM disks, PDF format for notes and details. The use of alternate media requires County approval prior to submission.

B. The submitted media shall be legibly labeled with the drawing or plat name, filename, drawing type (construction plan), project contact information (name, affiliation, phone number, and e-mail address), and submittal and file creation dates.

C. Coordinate datum shall be the current South Carolina State Plane Coordinate System as specified in the South Carolina Code of Laws.

D. South Carolina State Plane Coordinates shall be inherent to the submitted drawing file. That is, the submitted drawing file shall contain South Carolina State Plane coordinates, not local grid or paper space coordinates.

E. Survey requirements for this section shall be consistent with the State Minimum Standards published by the State Board of Registration for Professional Engineers and Land Surveyors and Section 3.1.2 of the Greenville County Land Development Regulations unless more stringent requirements are specified herein.

F. The vertical accuracy of surveys submitted for this section shall be +/- one-half of the elevation contour interval shown on the approved plan. The vertical datum shall be the North American Vertical Datum of 1988 (NAVD 1988).

G. The submitted drawing file must be clearly named and not exceed 27 characters. For example, Cedar Cove Phase II would be named CedarCovePhII.dwg (or dxf) and Cliffs Valley, Stone Creek Phase II; Lots 42 thru 45 would be named CliffsValStnCrkPhIILts42-45.dwg. Long subdivision names may be abbreviated as long as there is a clear relationship to the submitted plan name.

H. The Submitted drawing file will include features and text classified by the standard layer and naming convention shown in Exhibit 4.1 below. Drawing features and associated text shall not be combined in one layer. Text included in drawing files will use standard fonts that can be read without third-party software.

I. Closure is critical in converting CAD features to GIS features. All linear and polygon features must be snapped closed, when applicable, and free of symbols (circles at property corners) that break line continuity.

J. Submitted drawing files shall contain only complete features in the layers shown in Exhibit 4.1. Incomplete features provided for reference, may be included in an open layer, not shown in Exhibit 4.1 below.

K. A metadata text file with the same name as the drawing file (drawing_file_name.txt) is required with each electronic submission. This text file will provide technical parameters and contact information for the survey as specified in Exhibits 4.1 and 4.2 below.

L. A Portable Document Format (PDF) file shall be included in the submittal for each approved plan drawing that contains details relating to the layers specified in Exhibit 4.1 below. The file(s) shall have the same name as the drawing file followed by a number that begins with 1 for the first file (drawing_file_name1.pdf) and increases sequentially for subsequent files (drawing_file_name2.pdf, drawing_file_name3.pdf, etc.).

Exhibit 4.1 Drawing File (DWG /DXF) Specifications

Layer Number	Layer Name	Feature Type	Layer Description
2	PARCEL1	Line	Parcel/lot boundaries
4	ROW1	Line	Rights of way delineating private/public land boundary
6	GCP1	Point	Ground control points for drawing file (property corners, benchmarks, monuments, etc.).
17	CNTRLIN1	Line	Street/road centerlines (paved and unpaved)
19	CURBGUT	Line	Curb and Gutter
26	EAS	Line	Utilities, wildlife, transp., storm drainage/detention, etc.
33	BMPTEMP	Line	Temporary BMP's (Silt fence, rock checks, etc.)
34	BMP	Line	Permanent BMP's (Ponds, water quality devices, etc.)
35	STRMDRN	Line	Storm Drainage (Pipes, inlets, manholes, etc.)
47	CONTPROP	Line	Contours – Existing
48	CONTPROP	Line	Contours – Proposed
49	IMP	Line	Impervious areas (Rooftop, sidewalk, driveway, paved parking, etc.) (do not include roads)
53	GCPITXT	Text	Ground control type (property corners, benchmarks, monuments, etc.) and coordinates
51	LOTNUM1	Text	Proposed parcel lot number
52	LOTDIM1	Text	Bearings, distances, acreage, and x/y of POB
54	RDNAME1	Text	Street/road name
55	RDNAME2	Text	Road number (Federal, State, County highways, etc.)
59	EASTYPE	Text	Type of easement (utility, transp., wildlife, storm, etc.)
60	CONTEXTXT	Text	Elevations of existing contours
61	CONTPROPTXT	Text	Elevations of proposed contours
62	BMPTEMPTYPE	Text	Type of temporary BMP
63	BMPTYPE	Text	Type of permanent BMP
64	STRMDRNTXT	Text	Typical storm drainage text (diameter, length, material, invert elevations, rim elevations, etc.)

NOTE: Only layers applicable to a given plan need to be submitted.

Exhibit 4.2 Required Information

Metadata Text File (<drawing_file_name>.txt') Specifications
Please Complete All Applicable Items

Plat/Subdivision Name:
Drawing / File Name:

Type of Drawing (construction plan):
Submittal Date:
County:
City:

Parent Parcel #:
Number of Lots:

Type of Survey (GPS or Terrestrial):

Referenced Monument Names/Numbers:
Plat Tie Point Description:
Grid Bearing and Grid Distance to Monuments:
State Plane Coordinates of the Plat Tie Point

GPS Unit Type (Manufacturer and Model):
Elevation Reference: Y / N

Prepared by/Firm Name:
Street Address:
City:
State:
Zip Code:
Phone Number:
E-mail:

Software/Version Used:

4.6 General Survey Standards Background

Greenville County has made a substantial investment in a modern, computerized, multipurpose land information system. This system is referred to as the Greenville County Geographic Information System (GIS). The GIS is primarily a foundation of geographic information to support and improve County operations and community decision-making. As such, this information is a representation of geographic features that comprise Greenville County. These data are not intended to represent legal boundaries of any kind and are for information purposes only. The signed and sealed plat of record shall be referenced for all legal matters.

The base maps for this system are referenced to the Lambert Conformal single-zone South Carolina State Plane Coordinate System, which is based on the North American Datum of 1983. Geodetic survey monuments, usually consisting of a metal disk placed in top of a concrete post, have been placed throughout the county. Data sheets containing descriptions, and state plane coordinate values for these monuments are available from the South Carolina Geodetic Survey. These geodetic control monuments control the county mapping system. For the purpose of this Article, monumented geodetic

control points are only those geodetic monuments recognized by the South Carolina Geodetic Survey as being part of the state geodetic network. Property surveys affected by this ordinance will be referenced to their geographic locations, and therefore can be placed in their proper position on the state plane coordinate based county mapping system. Additionally, referencing property corners to state plane coordinates will improve County land records by allowing ground surveys to be properly translated to the GIS.

In addition to referencing property surveys to state plane coordinates, a key to streamlining the translation from ground surveys to the County's GIS is leveraging the advanced techniques surveyors, engineers, and land-development professionals are currently using. Specifically, property surveys are created using computer-aided design and drafting (CAD) tools and stored in a digital format, conceptually similar to the County's GIS. Submission of property surveys, affected by this Article, will be in a digital or electronic format. This requirement will expedite the design, plan review, and data maintenance processes within the County as well as improve data quality. For electronic submission to bring these expected benefits, standards must exist to ensure efficient data translation while preserving the integrity and accuracy of the original measurements.

ARTICLE 5 STREET CLASSIFICATION AND DESIGN STANDARDS

5.1 Street Classification

For the purpose of this Ordinance, all streets within the Land Development Regulations area shall be classified based upon the projected traffic volume on the street. These classifications and the required design speed for each are listed below:

5.1.1 Arterial Streets

High-volume streets that carry traffic between commercial centers or communities and may connect to freeways.

A. Interstates – the highest classification of arterials and designed for mobility and long distance travel with limited access. These are also known as principal arterials. Development cannot directly access the interstate system and these are owned and maintained by SCDOT.
B. Major - High-volume streets that carry traffic between commercial centers or communities. Must be built to SCDOT standards *(i.e. Wade Hampton Boulevard, Woodruff Road)*
C. Minor - Principal traffic arteries within residential or commercial areas that carry traffic from arterials to lower-order residential streets. Must be built to SCDOT standards *(i.e. Edwards Road, Haywood Road)*

5.1.2 Collector Streets

Streets that primarily connect residential streets to arterial streets.

A. Major– streets that provide direct connections between arterials or to arterials from residential streets and carry more than 4,000 vehicles per day. (i.e. East Standing Springs Road, Bridges Road)
B. Minor –streets that provide access to arterials from residential streets and carry 1,250 to 4,000 vehicles per day. *(i.e. Neely Ferry Road, Ansel School Road)*

5.1.3 Residential Streets

Streets used primarily to provide access from major or minor collector streets to residential units. By nature of their design, these streets serve vehicles passing through the area with either origin or destination within the area. The three classes of residential streets are listed below:

A. Collector – A street which provides access to residential dwelling units and carries 750 to 1,250 vehicles per day.
B. Sub-collector – A street which provides access to residential dwelling units and carries 250 to 750 vehicles per day. A street may not be classified as a sub-collector street if it is designed in such a way that it may carry at any future date more than 750 vehicles per day.
C. Access – A street providing access and/or road frontage to residential dwelling units and carries less than 250 vehicles per day. A street may not be classified as an access street if it is designed in such a way that it may carry at any time more than 250 vehicles per day.

5.1.4 Nonresidential Streets

Streets used for access to commercial, service, office, multifamily, mixed use and industrial properties as designated by the zoning classification or to those areas exhibiting this character or intent.

5.1.5 Private Roads

Private roads shall be designed to the county's public road standards except as noted below. All liability, maintenance, and upkeep of the travel surface, and all incidental structures shall be the responsibility of the landowners, developer, or homeowners association.

5.1.6 Mountainous Roads

A roadway is eligible for this designation if it lies within the area defined on the Land Development Regulations Area Map (see Appendix A) or if the immediate and surrounding terrain has an average minimum slope of 20 percent.

5.1.7 Alleys

All alleys are to be privately maintained with measures to ensure the travel way is not obstructed in any manner, including parking. The purpose of an alley is to provide vehicular access to developments that cannot be adequately served by existing streets or as a means of reducing or eliminating individual driveway accesses. The pavement design shall meet private alley standards. The geometry of the alley must be adequate to accommodate traffic if the alley will be used for public services (e.g. sanitation). Garages and fences should be set back from the alley right of way by three to five feet to provide an adequate turning area for vehicles. Alley intersections, sharp changes in alignment, and dead-ends shall not be permitted if alleys are to be used by service vehicles. Design speed is 15 miles per hour. The County shall not be responsible for damage occurring to the pavement structure due to use of the alley for access in providing public services. Private alleys are not eligible for being accepted into the county public road inventory.

5.2 Design Standards for Public Streets

All public streets and roads within the Land Development Regulations jurisdiction area shall comply with design standards as defined in this document. To determine which standards apply to any specific classification, refer to Table 5.1 (Design Standards Chart). In all instances where reference is made to a section of the South Carolina Department of Transportation (SCDOT) specifications for highway construction (SCDOT specifications), it is the most recent edition.

5.2.1 Right-of-Ways and Cross Section

A proposed right of way shall be of sufficient width to accommodate the required street cross section, sidewalk, catch basins and utilities. The required right-of-way is listed in the Table 5.1 (Design Standards Chart). Pavement width shall be sufficient to serve the projected traffic on and use of the street, but in no way shall the pavement width be less than that required in Table 5.1 (Design Standards Chart).

5.2.2 Grades

The minimum vertical tangent grade on any proposed street shall not be less than 1 percent and the maximum grade shall not exceed those listed in Table 5.1 (Design Standards Chart).

All proposed street grades when intersecting an existing and/or proposed street or highway shall be constructed as to meet the same horizontal grade of the existing intersection and shall have a maximum approach grade of 5 percent for a distance of 20 feet from the edge of pavement of the existing street to which the proposed connection is being made.

Exhibit 5.1 Maximum Approach Grade

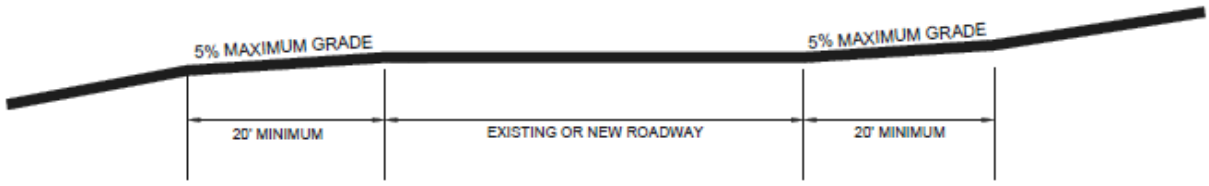

5.2.3 K Factors/Vertical Curves

See Table 5.1 (Design Standards Chart) for acceptable K factors.

5.2.4 Horizontal Curves

A. See the Table 5.1 (Design Standards Chart) for minimum horizontal curve radii. Where a deflection angle of more than 10 degrees in the alignment of the street occurs, the right of way shall be curved. At subdivision entrances there should be a minimum of 100' tangent prior to the start of any curve.

B. Rural Mountainous - For rural mountainous roads, additional pavement shall be provided in accordance with the following chart.

Exhibit 5.2 Horizontal Curves

Radius	Increased Width
70' – 90'	25%
60' – 70'	35%
50' – 60'	45%
Less Than 50'	50%

5.2.5 Reverse Curves

Reverse curves in the street rights of way shall be connected by tangents of not less than the following dimensions:

Exhibit 5.3 Urban Reverse Curves

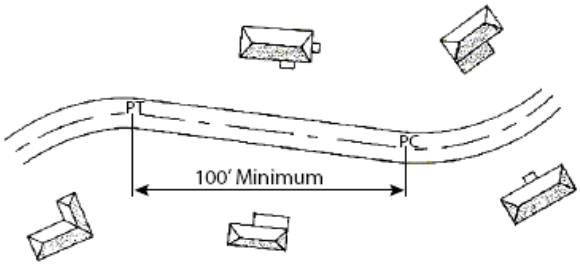

Urban

Exhibit 5.4 Mountainous Reverse Curves

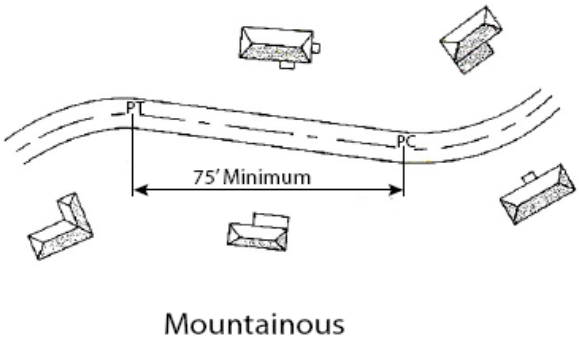

A. Minor Collector, Residential Collector, Residential Sub-collector, Residential Access - 100 feet
B. Nonresidential - 150 feet
C. Mountainous - 75 feet

5.2.6 Intersections

A. All new roads shall-intersect other streets at, preferably, right angles whenever possible. No street shall intersect any other street at an angle less than 60 degrees in relation to alignment of the intersecting road.
B. Four-way intersections shall be designed such that lanes on opposing streets line up with each other.

Exhibit 5.5 Intersection Angles

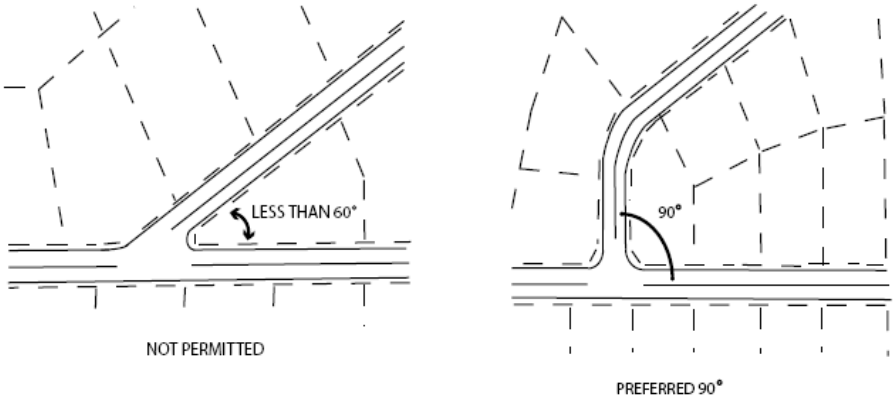

5.2.7 Intersection Offsets

The minimum distance between intersections shall be as follows:

Exhibit 5.6 Intersection Offsets

SPEED LIMIT ON MAIN THROUGH STREET	OFFSET IN FEET
25 MILES PER HOUR	125 FEET
35 MILES PER HOUR	150 FEET
45 MILES PER HOUR	175 FEET
55 MILES PER HOUR	200 FEET

Exhibit 5.7 Street Jogs/Offsets

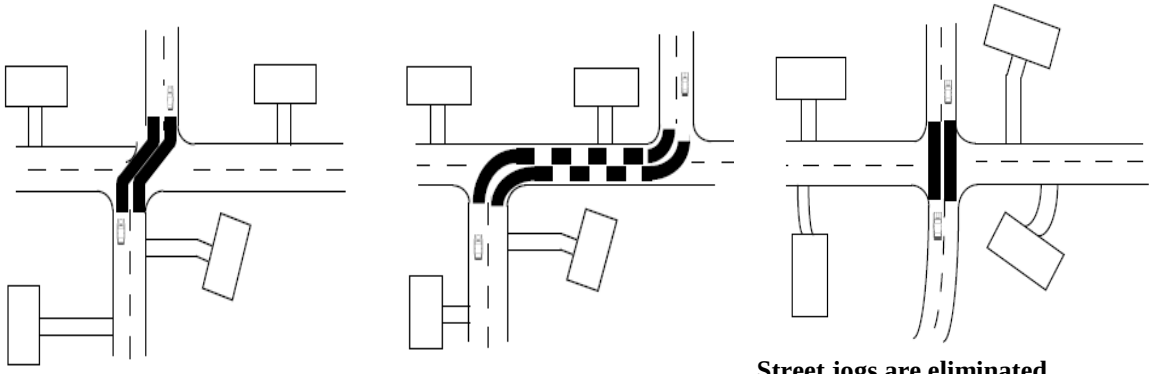

Sharp street jogs create hazardous driving conditions. Not Acceptable

See chart for exact offset

Street jogs are eliminated with proper design.

Table 5.1 Design Standards Chart

Street Classification (Corresponding Volume)	Street Width (Feet)+	ROW Width (Feet)^* With Sidewalk	Design Speed (mph)	K-Factor		Curb Radii (Feet)	Grade Maximum (%)	Minimum Horizontal Radius (Feet)	Tangent Between Reverse Curves (Feet)
				Crest	Sag				
Residential Streets (Public & Private)									
Access (<250 VPD)	20	42	20	7	17	25	11	100**	50
Subcollector (250 - 750 VPD)	22	44	25	12	26	25	10	155**	50
Collector (750 -1250 VPD)	24	46	25	14	26	30	10	155	100
Other Streets (Public & Private)									
Minor Collector (1250-4000 VPD)	26	48	30	16	26	30	10	250	100
Nonresidential	28	50	35	29	49	40	8	300**	150
****Rural Mountainous (Public & Private)**									
Paved (≤ 250 VPD)	20	52	20	7	17	25	18	75***	75
Paved (>250 VPD)	22	52	25	12	26	25	18	75***	75
Private									
Alleys -One Way	12	20	15	2	15	20	8	50**	25
Alleys -Two Way	18	26	15	2	15	20	8	50**	25
Private Mountainous									
Unpaved	20	50	20	7	17	20	15***	50	50

For alley intersections, sharp changes in alignment and dead ends shall not be permitted.
+ Minimum street width must be 24 feet when connecting to a state road. A minimum 100-ft taper shall be used to taper down to the appropriate width based on street classification.
^ Right of way may be reduced by 2 feet if using traditional 18" curb and gutter without sidewalk.
* Right of way for rural cross sections is 50 feet
** Based on crown of 1/4"/ft - no superelevation
*** Extra Pavement required in accordance with Table 5.1

5.2.8 Drainage

All public roads shall be designed with proper drainage systems to collect roadway runoff (and runoff from adjacent properties depending on topography) and convey the flows to a suitable discharge point. Roadway drainage design shall comply with Article 17 & the most recent edition of the Stormwater Design Manual.

5.2.9 Non-Through Streets, Cul-de-Sacs and Turnarounds

A. Non-Through Streets
The following alternative turnarounds may be allowed with the approval of the County Engineer or his/her authorized representative.

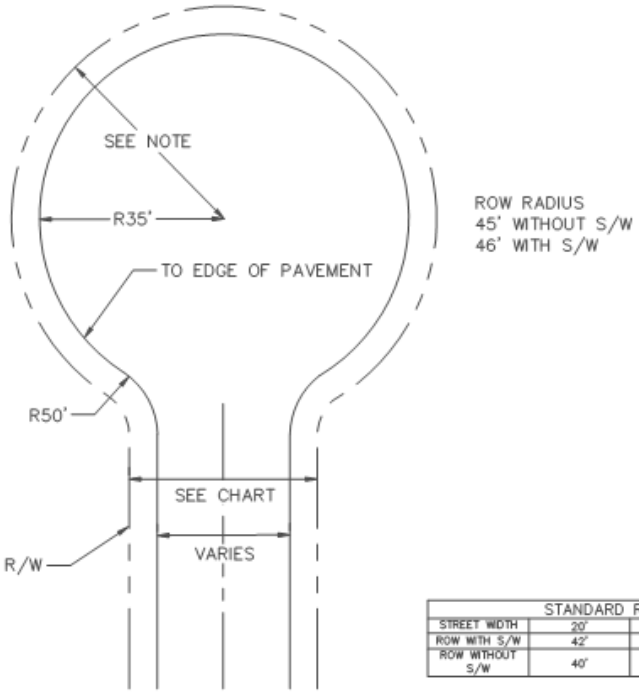

STANDARD RIGHT-OF-WAY WIDTHS				
STREET WIDTH	20'	22'	24'	70'
ROW WITH S/W	42'	44'	46'	92'
ROW WITHOUT S/W	40'	42'	44'	90'

STANDARD CUL-DE-SAC

N.T.S.

Exhibits 5.8A-E (Cul-de-Sac with Island, Offset Cul-de-Sac, Standard Turning Area, Hammerhead and "Y" Turnaround)

CUL-DE-SAC WITH ISLAND (A)

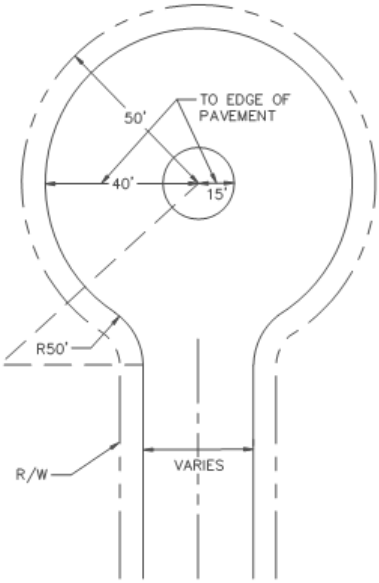

OFFSET CUL-DE-SAC (B)

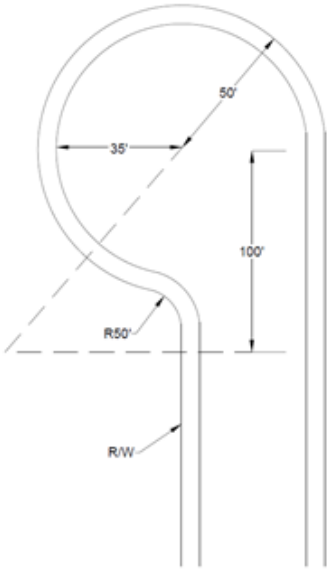

STANDARD TURNING AREA (C)

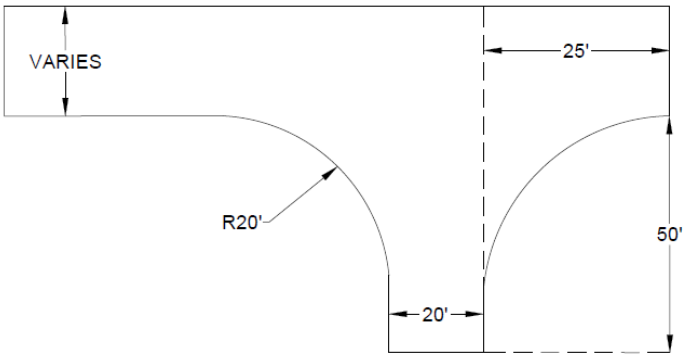

HAMMERHEAD (D)

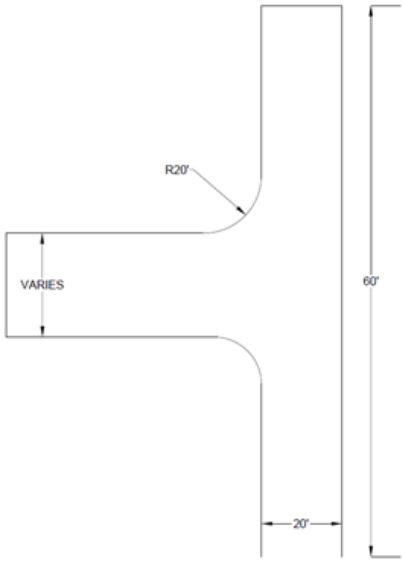

"Y" TURNAROUND (E)

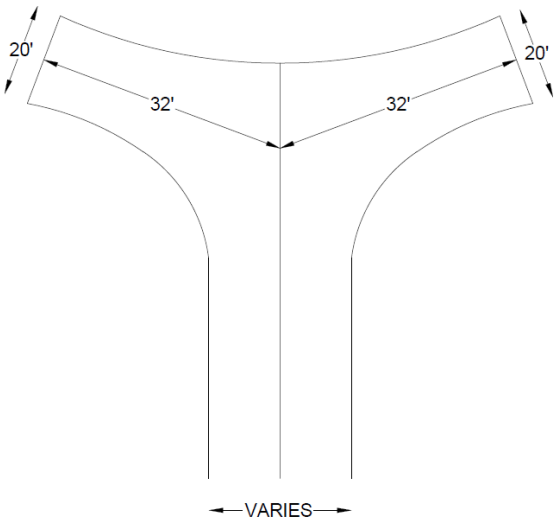

B. T-Type and Hammerhead Turnarounds
T-type or hammerhead turnarounds are encouraged for stub-out streets. If a stub-out street is less than 200 feet long or the depth of the lot, no turnaround is required. Stub-outs greater than 200 feet long and serving more than 2 lots require a turnaround. (See also Section 8.9.1, Stub Streets for Residential Subdivisions)

C. Temporary Turnarounds
In phased subdivisions, temporary turnarounds are required for through streets planning to continue into a new phase. The temporary turnaround will begin beyond the property line of the last lot shown on that phase's final plat. Temporary turnarounds shall have a minimum slope of one (1) percent as measured from the center. When a temporary turnaround is required, the right-of-way shall be extended to the property line. A notation shall be made on the final subdivision plat that states that the land outside the street right-of-way shall revert to the abutting property owners.

Exhibits 5.8 F (Interim Turnaround) and G (Temporary Cul-de-Sac)

TEMPORARY INTERIM TURNAROUND (F)

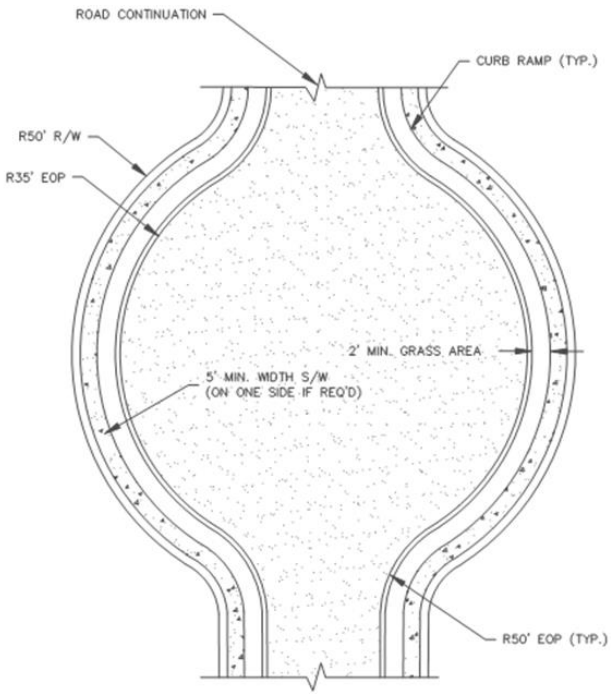

TEMPORARY CUL-DE-SAC (G)

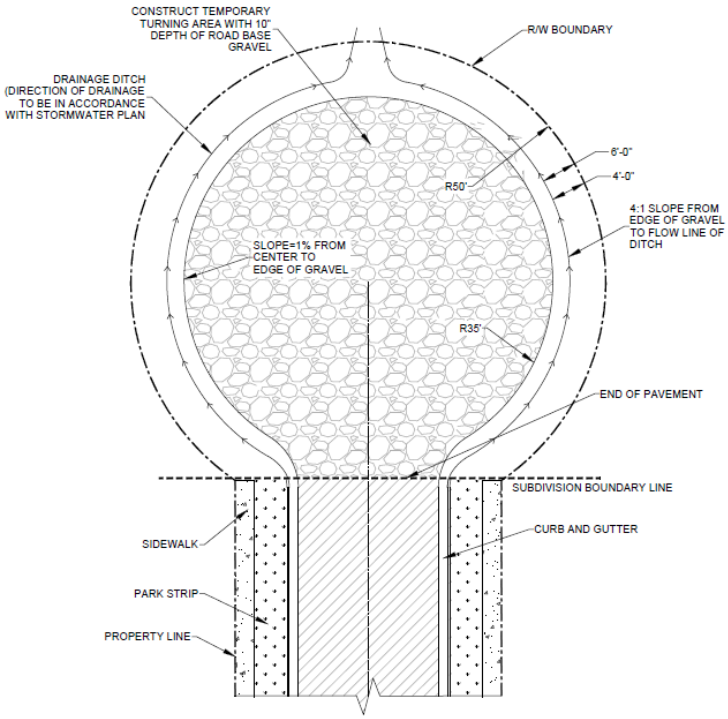

5.2.10 Eyebrows

For an interim turnaround, an eyebrow can be used.

A. Pavement width design shall be in accordance with most current AASHTO Policy on Geometric Design of Highways and Streets standards for WB-40 vehicles. A minimum paved surface width of 25 feet is required.
B. A minimum 10 feet right of way shall be dedicated beyond the outside edge of pavement.
C. Detail dimensions are shown on the following example:

Exhibit 5.9 Eyebrow Detail

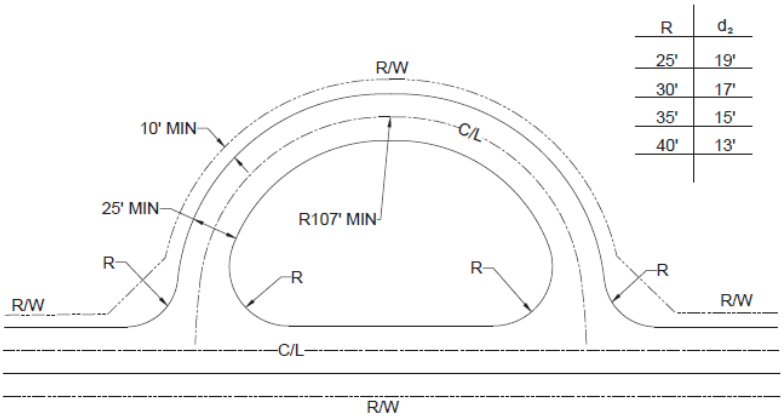

**Note: Habitable structures are prohibited within islands.*

5.2.11 Standard Islands

A detailed design plan for proposed roadway islands must be shown on the road plan and profile and shall adhere to the following standards:

A. General Standards

1. The plant materials in the entrance island shall be maintained to provide a sight tunnel between the height of 30 inches and 72 inches above the adjacent roadway surface for a minimum distance of 35 feet from the intersecting right of way. Taller items may be placed in the entrance island beyond the point of 35 feet.
2. In cul-de-sac islands, eyebrow islands, and any island except entrance islands, no plant material with a mature height in excess of one (1) foot will be allowed within five (5) feet of the face of curbing.
3. A sight tunnel between the height of 30 inches and 72 inches above the roadway elevation also shall be required for all plant materials located in islands within traffic control islands, cul-de-sacs and eyebrows (if allowed by variance).
4. Signs within entrance islands may be allowed upon review by the Traffic Engineer. Entrance island signs shall be placed at least 3 feet from the edge of curbs paralleling the travel lanes. No above-ground structures shall be permitted in the last 5 feet of the entrance island. Sign maintenance within the islands are the sole responsibility of the Homeowners Association.
5. No above-ground structures, such as retaining walls, raised planter beds or water features and/or fountains, are allowed in any island or within right of way of a public

road. Lighting and flagpoles may be allowed if placed in accordance with the requirements published above. Lighting, neighborhood signs, flagpoles are the sole responsibility of the Homeowners Association.

6. Trees within islands or the public road right of way will be allowed only upon approval of the landscape plan. Plant material and the maintenance of the plant material is the sole responsibility of the Homeowners Association (see list of approved plant material in Appendix B)
7. Any nonconforming structure or plant within any island may be removed at the discretion of the County Engineer or his/her authorized representative.
8. Planter islands can be used to meet post construction water quality requirements by using low impact development principles. Refer to the LID details for construction details and the stormwater design manual for the appropriate plant material and composite soil mixture. Appendix B also lists plants that can be used for bioretention facilities (ie. Low Impact Development features) listed in Section 5.2.11 and Exhibit 5.8 and 5.9.

B. Landscaping Plans

A detailed landscape plan for all roadway island(s) shall be submitted to the Land Development Division for review during the roadway plan review process. The plan shall adhere to the general standards for public roads.

C. Roadway Entrance Islands

1. The minimum width shall be 4 feet measured from the outside face of the curb to the direct opposite outside face of the curb.
2. Minimum pavement width shall be 20 feet in the lane exiting the subdivision and 16 feet in the lane entering the subdivision**.** The width of the road at SCDOT right of way shall be determined by the latest edition of the SCDOT ARMS Manual. Pavement width beyond the end of the island shall be tapered at a rate of 8:1 to the typical pavement width. A double yellow centerline shall be provided when the island is more than 5 feet from the right of way.
3. No taper shall be allowed across the width of intersecting roadways. Road widths across intersections must be equal.
4. Curb radius at the intersection shall be no less than 35 feet.
5. No driveway curb cuts shall be allowed within 5 feet of the end (rear) of the entrance island.
6. There shall be 100 feet of tangent roadway separating the entrance from a curve in the roadway.
7. The island shall be curbed with the ends rounded.
8. The island shall be under drained in accordance with the Subsurface Drainage Detail in Appendix F.
9. The minimum length shall be 20 feet measured from the outside face of the curb.
10. The maximum length shall be 50 feet measured from the outside face of the curb.

Detailed dimensions are shown as follows:

Exhibit 5.10 Entry Island Layout

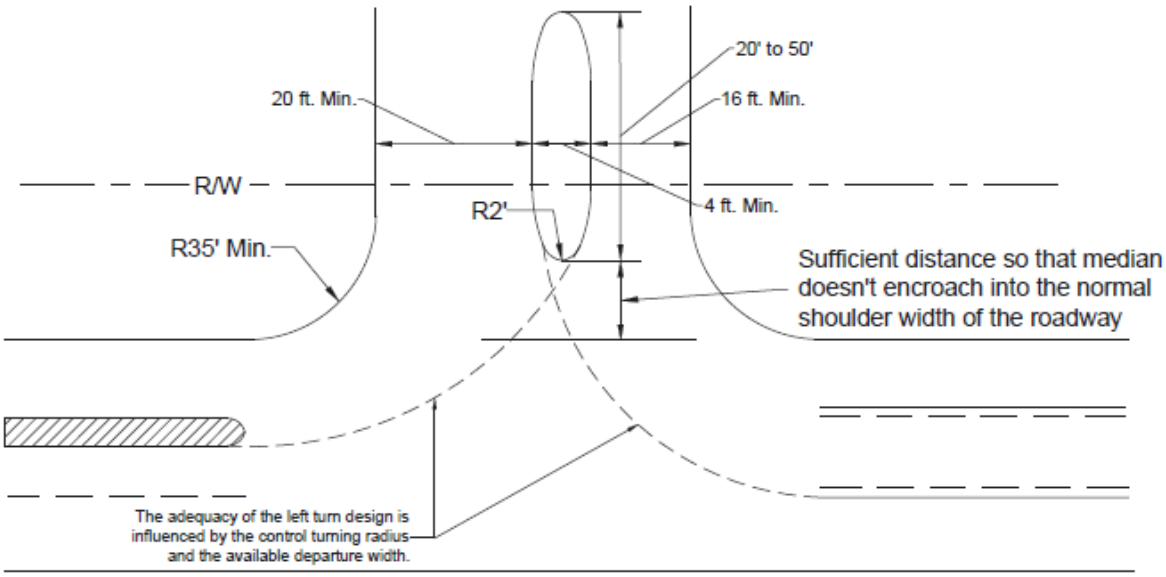

ENTRY ISLAND LAYOUT

NO SCALE

Exhibit 5.11 Entrance Island Planting

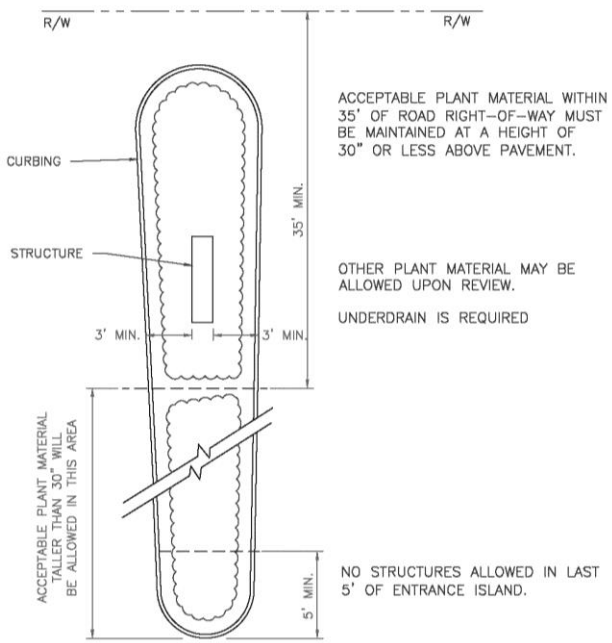

ENTRANCE ISLAND PLANTING

N.T.S

Exhibit 5.12 Island Planting Detail

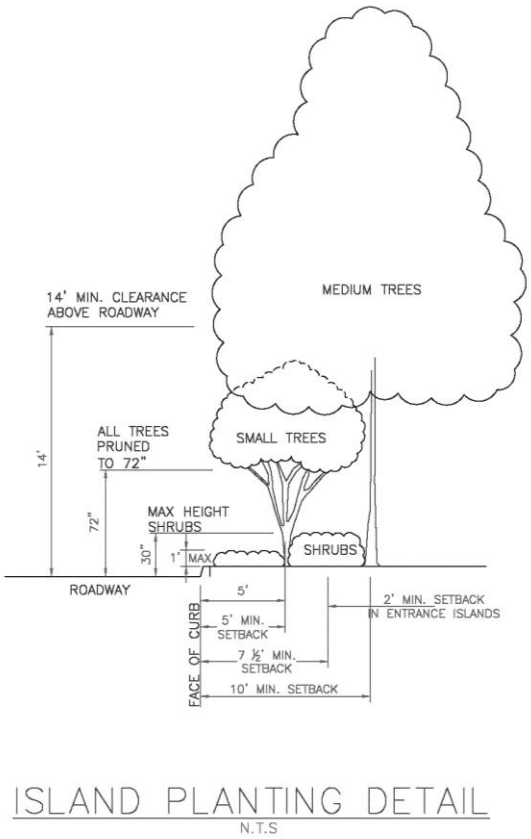

D. Cul-de-Sac Island

1. Pavement widths shall be in accordance with the most current AASHTO Policy on Geometric Design of Highways and Streets standards for WB-40 vehicles. A minimum width of 25 feet of paved surface shall surround the island.
2. A minimum 10-foot right of way shall be dedicated beyond the outside edge of pavement regardless of the shape or size of the cul-de-sac.
3. Rolled curb is required to allow adequate turning radius for Public Service vehicles.
4. Cul-de-sac islands other than those shown in this document must be approved by the Land Development Division.
5. Except in the case of offset cul-de-sac pavements, all cul-de-sac islands shall be directly centered in the right of way and under drained in accordance with Section 5.2.6.
6. See Appendix F for the Subsurface Drainage Detail or Appendix E, the Low Impact Development (LID) details (if applicable).

Detail dimensions are shown on the following example.

Exhibit 5.13 Typical Cul-de-Sac Detail with Island

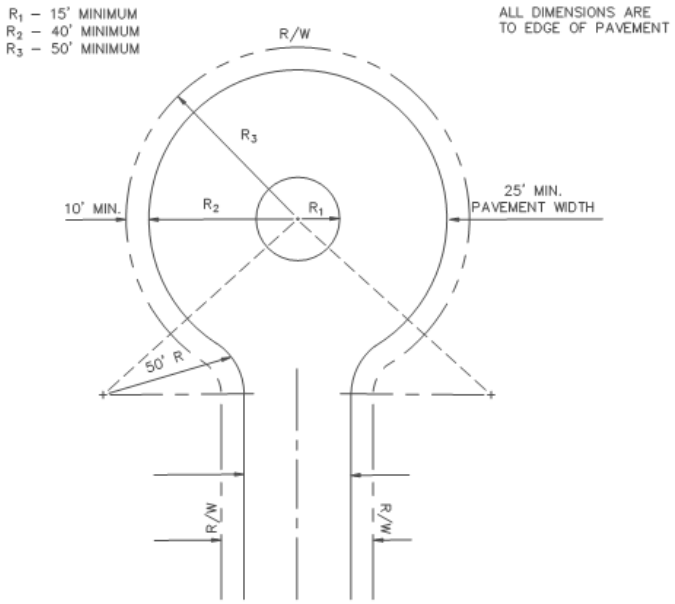

E. Island Ownership and Maintenance
Ownership and maintenance of all islands shall remain with the developer until such time as ownership is conveyed to a homeowner's association and/or the responsibility for maintenance is addressed in restrictive covenants. The surveyor or engineer will include a statement on the final plat addressing ownership and maintenance of the island(s).

F. Exclusion from Dedication
A statement excluding all island(s) from the dedication to the county shall be required prior to approval of the final plat. The statement of exclusion also shall be shown on the final plat and the road dedication form.

5.3 Private Roads

5.3.1 Design Standards for Private Roads

A. All private roads shall be designed to public standards, except as provided herein. Pavement design may consist of 1.5” of surface with 2” binder or 4” of stone.

B. Landscaping and Structures within Islands

1. A detailed landscape plan for all roadway island(s) shall be submitted to the Land Development Division for review during the roadway plan review process. The plan should adhere to the same standards as those for public roads; however, variances for the use of differing plant material and inclusion of non-standard configurations of islands may be granted by the Planning Commission when, upon recommendation from the Traffic Engineer, no safety hazards will exist. At no time may the plant material or above-ground structure(s) restrict the entrance of emergency vehicles into or along the roadway. The maintenance of plant material and structures within islands in private roads is the responsibility of the homeowners’ association or covered by the restrictive covenants.

2. If any plant material or structures(s) restricts the passage of emergency vehicles into or along the roadway, it will be removed by the developer or Homeowners Association within 30 days of receipt of notification from the appropriate fire district.
3. Planter islands can be used to meet post construction water quality requirements by using low impact development principles. Refer to the LID details for construction details and the stormwater design manual for the appropriate plant material and composite soil mixture.

C. Gates

Private residential roads that connect and provide through access to two public roads shall be gated.

When gates or other approved methods of securing access roads are used, ALL of the following, where applicable, shall apply.

1. Minimum gate width shall be 20 feet; however, if there are single gates in each direction, the minimum width of each gate is 16 feet.
2. Gates shall either swing in the direction of apparatus travel or shall be of a sliding variety.
3. Gates in which manual operation is allowed by the authority having jurisdiction (AHJ) shall be of a type construction so that they can be operated by one person. A padlock or chain and padlock shall not be used on manual gates unless an approved key box containing all key(s) is installed at the gate location or the locking devices are capable of being opened with the use of common forcible entry tools.
4. Electric opening devices shall be readily accessible by fire department personnel for emergency access.
5. All locking device specifications, whether located on manual or electric gates, shall be approved by the authority having jurisdiction prior to being installed.
6. All components of gates and other approved securing devices shall be maintained and kept in proper working order at all times.
7. Stacking length for vehicles shall be at least 50’ from the edge of pavement.

D. Mountainous - Private Unpaved

1. A minimum right of way of 50 feet.
2. A minimum all weather surface width of 20'.
3. Must be surfaced with a minimum of 4" of compacted stone base.
4. A minimum overhead clearance of 13 feet 6 inches.
5. Minimum intersection offset requirements as set forth in Section 5.2.7.
6. Comply with the drainage design and construction standards outlined in Articles 17 and 6.
7. Horizontal and vertical alignment to comply with the Design Standards Chart Table 5.1.
8. Meet property line and intersection requirements as set forth in Section 8.14.1, Sight Triangles.

E. Maintenance

All liability, maintenance, and upkeep of the travel surface, and all incidental structures shall be the responsibility of the landowners, developer or homeowners association. Installation and maintenance of driveway pipe, drainage features, street name signs and traffic control signs shall be the responsibility of the landowners, developer, or homeowners association.

F. Final Plats
The final plat on which a private road is established must contain the following statement:

> *"Each property owner is provided access to a public road by a private road of which each property owner has an undivided interest. The private access road will not be accepted and maintained as a public right of way until such time as it meets minimum county standards as reflected in the most current Land Development Regulations."*

G. Certification of Completeness
Design certification shall be provided by a registered Professional Engineer. Prior to recording a Final Plat or releasing the Financial Security, as built certification of the completed roadways and drainage system to be furnished to the Land Development Division.

5.4 Unpaved Private Drives

The intent of this provision is to provide affordable access to developments with a limited number of lots created in a rural environment, without having to construct a road to County public or private road standards. The intent is to provide for the safety of the property owners by requiring adequate access for Fire, Emergency Medical, and Law Enforcement vehicles. This is intended for use by families in probate, trusts or estate settlement. By consolidating multiple driveway connections, it provides for safer access to existing public roads. It provides for the continued uninterrupted use of the access for all of the owners by establishing a durable easement, and assigns responsibility for continuing maintenance of the access.

A. Recording requirements
For the purpose of dividing property in the unzoned areas or areas zoned RR-1 and RR-3 of the County the Planning Commission may authorize the creation of lots utilizing unpaved private drives under the following conditions:

1. No more than six (6) lots are created; however, additional lots may be allowed upon review and approval by the Planning Commission.
2. The unpaved private drive must be shown on a Preliminary Plan and must meet all the criteria for a preliminary plan as set forth in the provisions of Article 3 and defined with metes and bounds.

B. The recorded plat must carry a statement that the unpaved private drive shall not be accepted and/or maintained as a public right of way until such time as it meets minimum County standards for a public road, as reflected in the most current Land Development Regulations. This includes but is not limited to paving, establishing proper drainage, meeting horizontal and vertical curve requirements and dedicating 50’ of right-of-way.

C. The unpaved private drive must be established by the creation and recording of a minimum 40 foot wide right of way, which:

1. Is appurtenant
2. Is non-exclusive
3. In which all property owners own an undivided interest in the drive
4. Names a person, persons, or an entity responsible for ownership and maintenance of the drive.

An unrecorded copy of the Unpaved Private Drive Easement Agreement, which addresses items 1 through 4 listed above, and a Stormwater Pollution Prevention Plan (SWPPP) shall be provided to the Subdivision Administrator for review and approval prior to recording the plat.

D. Minimum Construction Standards

1. In addition to meeting all the County and/or SCDOT encroachment permit requirements for offsets and construction within a public right of way, the unpaved private drive must also conform to the following minimum construction standards for the passage of emergency vehicles listed below. These standards are generally based on the Fire Code Apparatus and Road Access requirements.
2. An all-weather surface consisting of a minimum of 4" compacted stone base.
3. A minimum improved surface width of 20 feet for its entire length.
4. A minimum of 13 feet, 6 inches of vertical clearance along its entire length.
5. A turn-around opportunity at its terminus, to be approved by the respective fire protection district that adequately provides for storm water drainage. Pipes for stream crossings or storm water drainage must be sized appropriately for the passage of at least the 10-year design storm and be able to withstand the anticipated loads of emergency vehicles without deforming.
6. The unpaved private drive shall have adequate drainage. An approved storm SWPPP must be in effect for the subdivision.
7. The maximum length of the drive may not exceed 1200 linear feet without the authorization of the Planning Commission and respective fire protection district.
8. Vertical and horizontal curves and grades must meet the minimum requirements for private roads.
9. If the drive is to serve more than two (2) lots, the subdivider must furnish appropriate traffic control signs and road name signs.
10. Each lot created on such an unpaved private drive must have a minimum of 20 feet of road frontage on the unpaved private drive.

E. Driveway Access Summary Plat

Before the summary final plat can be filed, the required regulatory signage must be in place and the drive must be constructed. A design load calculation by a registered professional civil engineer, hired by the developer, must be provided to the Fire Marshall or Chief of the respective Fire Protection District. A letter documenting that the drive meets the Fire Code requirements must be furnished to the Subdivision Administrator by the Fire Marshall or Chief of the respective Fire Protection District.

F. Recording Limitations

Plats utilizing this unpaved private drive may not be recorded under Financial Security.

G. Future subdivision of lots

1. Without the authorization of the Planning Commission, lots created on unpaved private drives shall not be further subdivided until such time as the drive is brought into compliance with the County's public or private road standards, as reflected in the most current Land Development Regulations. This includes but is not limited to paving, establishing proper drainage, meeting horizontal and vertical curve requirements and dedicating 50' of right-of-way.

2. Maintenance Responsibility

   a. Continued maintenance of these access ways must be provided by the owner(s).

b. Upon written notification by the Local Fire Authority Having Jurisdiction, the person(s) or entity responsible for maintenance must correct any cited deficiencies within 60 days of receipt of notification of the need for maintenance.

H. Variances from these requirements may be allowed on a case-by-case basis, upon recommendation of the respective Fire Protection District and with approval from the Planning Commission.

ARTICLE 6 ROADWAY CONSTRUCTION STANDARDS

6.1 Construction Plan Submittal Requirements

After preliminary approval is granted, detailed construction drawings shall be submitted for review and approval to other departments or agencies prior to construction.

A. A detailed drainage plan shall be submitted to the County Engineer or his/her authorized representative. The detailed drainage plan shall have a separate topographic map with not greater than 12 foot contour intervals showing the overall drainage conveyance system, the layout of the storm drain system (both open conveyance system and closed piped system(s)) and the delineation of the drainage areas of the proposed storm drainage conveyance system. Calculations for pipe and channel conveyance designs shall be submitted or shown on the plans. Individual lot drainage patterns, stormwater conveyance channels and/or pipe conveyance systems shall be shown within easements or right of ways. This detailed drainage plan will be considered as a component of a stormwater management and sediment control plan included as a part of the subdivision's comprehensive stormwater pollution prevention plan (SWPPP). This drainage plan must be in compliance with SCDHEC's Regulation 72-300 and the NPDES (National Pollutant Discharge Elimination System) General Permit for Stormwater Discharges for Construction Activities, Greenville County's Flood Damage Prevention Ordinance and Stormwater Management Ordinance. Specific design criteria for the drainage plan can be found in the Stormwater Management Design Manual on the Land Development Division's website under the Planning/Engineering/Forms tab.

   Publicly available data may be used at the discretion and risk of the subdivider and/or his authorized agent.

B. At the time the drainage plan is submitted, a road centerline plan and profile for each street shall be prepared with the plan view immediately above the profile. The horizontal scale should be no greater than 1"=50' and vertical scale no greater than 1"=10. The following will be shown:

   1. Alignment information.
   2. Existing and proposed centerline elevations at no less than 100 foot stations.
   3. The storm drain system must be shown on the road profile plan with type of inlet, station with offset, slope and invert elevation.

C. Where the subdivision includes a lake or pond (existing or to be constructed) in connection with the development, the subdivider shall verify with DHEC that it meets the standards of the Dam and Reservoir Safety Act Regulations. If these water impoundments are additionally a part of the stormwater management of a subdivision, such plans must also be reviewed by the Land Development Division.

D. Detailed plans of any proposed entrance islands and any proposed cul-de-sac islands shall be submitted to the Land Development Division, applicable Fire Department prior to construction. These plans must include any proposed or existing plant materials. (See Appendix B & Exhibit 5.11 Entrance Island Planting)

6.2 Construction Plan Review/Inspection Fees

These fees are applied to cover construction plan review and field inspection and can be found on the Subdivision Administration website.

Table 6.1 Fee Table

Items Covered by Fees	
Plan Review	
	First Review and First Resubmittal
	Additional Plan Revisions
	Variance Fee
Field Inspection	
	Pre-Construction
	Clearing and Grubbing
	Rough Grading
	Drainage
	Subgrade
	Binder
	Surface Asphalt
	Final Punch List
	Final Signoff
	Additional Re-Inspection of any of the above items

Greenville County field inspection schedule allows for one inspection for each of the stages of construction listed above with the exception of the subgrade and surface asphalt inspection where one additional re-inspection is allowed without incurring the additional re-inspection fee. This schedule applies for all the roads shown in that phase of construction as documented on the final recorded plat for that phase.

6.3 Minimum Specifications for All Roadways

A. Roadways for access to buildings, facilities, or property shall be capable of supporting a minimum of 80,000 pounds (DOT CFR 2007) before any combustible products are allowed to be brought on site and be constructed using asphalt, concrete, or other permitted surface as approved by the authority having jurisdiction. This is equivalent to 6” of gravel with the subgrade at 98% compaction of a Standard Proctor (ASTM D-698) or 3” of binder course based on road type.
B. Water lines and hydrants must be installed and in working order prior to roadways being built, final plat recorded and combustible products being allowed on site. A model home may be constructed if there is a hydrant within 600 linear feet and a fire truck can get within 150 feet. A statement of approval from the respective fire department shall be submitted to support the model home construction.
C. Roadways shall have a minimum width in accordance with Table 5.1 (Design Standards Chart) and a minimum unobstructed height of 13 feet 6 inches.

6.4 Construction Standards for Public Roads

In addition to all the design standards previously listed, the following construction standards are required. Miscellaneous Design details are provided in Appendix F.

6.4.1 Clearing and Grubbing

All work shall be required to conform to requirements and standards as set forth in the “Clearing and Grubbing" section of the most recent edition of SCDOT Specifications.

6.4.2 Subgrade

Subgrade shall be constructed as specified in the “Subgrade” section, in the SCDOT Specifications, or sound, undisturbed residual soils. In fill areas, all subgrade soils shall be compacted in accordance with the "Construction Requirements" section of the SCDOT Specifications.

6.4.3 Base Course

A. Granular Base Courses

The granular base course shall be one of the following types, compacted and tested in accordance with the "Compaction and Testing Requirements" section of this Ordinance. The minimum compacted thickness requirements are given in Table 6.2 Paving Standards Chart.

1. Sand Clay Base Course as specified in SCDOT Specifications.
2. Soil-Aggregate Base Course as specified in SCDOT Specifications.
3. Macadam Base Course as specified in SCDOT Specifications.
4. Stabilized Aggregate Base Course as specified in SCDOT Specifications.
5. Cement Stabilized Base Course as specified in SCDOT Specifications.

B. Asphaltic Base Courses

An asphaltic base may be used in place of or in conjunction with granular bases. The asphalt base is to be one of the following types, constructed in accordance with the requirements set forth in the appropriate sections of the most current edition of the SCDOT Specifications. The minimum compacted thickness requirements are given in Table 6.2 Paving Standards Chart 7 & Table 6.3.

1. Hot Laid Sand Asphalt Base Course as specified in SCDOT Specifications.
2. Hot Laid Asphalt Aggregate Base Course as specified in SCDOT Specifications.
3. Hot Laid Asphalt Concrete Binder Course as specified in SCDOT Specifications.

C. Surface Course

The surface course is to be one of the following types while adhering to general specifications set forth in the SCDOT Specifications for bituminous pavement and for rigid pavement.

1. Hot Laid Asphaltic Concrete Surface Course, Type C or latest equivalent approved by the SCDOT. Type D or latest equivalent approved by the SCDOT may be used with the prior authorization of the County Engineer or his/her authorized representative. The required compacted thickness requirements are given in Table 6.2 Paving Standards Chart & Table 6.4.
2. Portland Cement Concrete. As specified in the SCDOT Specifications, with a minimum thickness of 6" for residential streets and 7" for commercial / industrial streets. Reinforcing fabric must be used.

6.4.4 Site Specific Paving Designs

At the discretion of the Engineer of Record, he or she may provide the County with a pavement design report from a geotechnical engineer recommending the pavement thickness(es) for each road in the subdivision based on appropriate CBR values and anticipated traffic volumes. This report should include enough samples to provide a true representation of the soil type variations throughout the subdivision, with special attention to the appropriate pavement design in areas of fill.

6.4.5 Restrictions on Asphalt Paving Work

A. No surface asphalt paving shall be installed on a wet surface or when the weather conditions are otherwise unfavorable. To pave the binder and/or surface course, temperature must be 45 degrees Fahrenheit and rising in the shade.
B. The asphalt shall be delivered and placed in accordance with the SCDOT Specifications, with the exception that prime must be cured for a minimum of 24 hours if used.
C. The asphalt shall be delivered to the spreader at a temperature between 250 degrees Fahrenheit and 325 degrees Fahrenheit and, with the exception of sand asphalt mixture for base course construction, within 20 degrees Fahrenheit of the temperature set at the plant.
D. Where prime coat is used, the prime coat must cure for a minimum of 24 hours prior to paving and shall be applied as specified in the SCDOT Specifications. Prime will be used at the discretion of the County Engineer or his/her authorized representative and not required if stone base is paved within 24 hours of being set up and approved.
E. Equipment Size requirements:

    1. Steel Wheel Roller – 5 to 8 ton
    2. Back Roller – 5 to 8 ton
    3. Rubber Tire Roller – 9-wheel rubber tire
    4. Paving Train – self-propelled asphalt paver w/vibratory screed capability and standard 10-foot screed.

F. Final surface course shall be applied 90 days after the first surface course or once 25% of the homes within that phase of the subdivision have been constructed, whichever is greater. In order to apply the final surface course prior to this requirement and ensure no construction traffic damage to the final surface, a thicker alternate paving standard may be approved on a case by case basis.

Table 6.2 Paving Standards Chart

Street Classification (Corresponding Volume)	Full Depth Asphalt (inch)		Asphalt with Binder and Stone Base		
	Surface	***Binder & Surface (!)***	***Surface***	***Binder***	***Stone***
Residential Streets (Public and Private)					
Access (<250 VPD)	1 ½”	2 ½”, 1 ½”	1 ½”	2 ½”	6”
Subcollector (250 - 750 VPD)	1 ½”	2 ½”, 1 ½”	1 ½”	2 ½”	6”
Collector (750 -1250 VPD)	1 ½”	2 ½”, 1 ½”	1 ½”	2 ½”	6”
Minor Collector (1250-4000 VPD)	1 ½”	2 ½”, 1 ½”	1 ½”	2 ½”	6”
Nonresidential	1 ½”	6” (*)	1 ½”	4” (*)	8”
Rural Mountainous					
Paved (<250 VPD)	1 ½”	2 ½”, 1 ½”	1 ½”	2 ½”	6”
Paved (>250 VPD)	1 ½”	2 ½”, 1 ½”	1 ½”	2 ½”	6”
Private Mountainous					
Unpaved	6" Stone**			6" Stone **	

! 1st surface lift must be placed within 7 days of placement of binder (unless inclement weather prohibits)
* must be placed in 2 lifts
**may use other approved base material, RAP is preferred

6.4.6 Storm Drainage (use the latest SCDOT Standard Specifications except as noted)

All lines will be laid in accordance with the “Pipe Culverts” County Standards. Strict compliance to backfilling and compaction restrictions and regulations are required.

A. Storm Drain Pipe - shall conform to the following standards:

1. Reinforced Concrete Pipe - shall be Class III or better, as specified in the SCDOT Specifications.
2. Corrugated Metal Pipe - shall be aluminized steel, Type II or other approved by the SCDOT. All aluminized steel pipe shall be Type II, with re-rolled ends having not more than two (2) corrugations per end. All corrugated metal pipe shall also be of sufficient thickness to meet the design load requirements for the proposed cover height. Connectors for corrugated metal pipe shall be fully corrugated bands with an integral flange or higher quality connector. Band material shall be the same as the pipe provided and shall be of adequate gauge to accommodate the loading and cover requirements. When corrugated metal pipes are used in outfall conditions, a headwall is required.
3. High Density Polyethylene Pipe - Smooth bore HDPE pipe will be evaluated on a case-by-case basis for use in the County’s right-of-way.

a. General Limitations: Corrugated HDPE pipe, with diameter from 15” to 36”, shall be installed in accordance with the County-approved construction plans and to County specification. HDPE pipe is allowed for use on roads designed to the urban standards, as outlined in the land development regulations. All outfall pipes will have a headwall installed. The County Engineer or his/her authorized representative shall meet on-site with the contractor prior to installation. The contractor must demonstrate knowledge of proper installation techniques and materials/equipment required for the job. Inspections by a geo-technical firm during pipe installation may be required. HDPE pipe installations to the road shall require CR14 stone backfill. It will not be allowed for driveway culverts.

b. Materials - HDPE
General: Corrugated high-density polyethylene pipe (15" diameter and greater) shall meet the requirements of AASHTO M 294 (latest edition). This specification covers the requirements and methods of tests for corrugated high-density polyethylene pipe, couplings, and fittings for use in surface and subsurface drainage applications. Type C indicates a corrugated high-density surface both inside & outside. Type S indicates an outer corrugated high-density pipe wall and a smooth inner liner.

Type S shall be the only type allowed for permanent installations on State or County roads. Type C shall be allowed for temporary applications only.

Source Approval: Only materials from sources appearing on the SCDOT approved list entitled "Corrugated High Density Polyethylene Pipe Sources" shall be used in the work. A copy of this approval list of sources may be obtained from the SCDOT Research and Materials Engineer. A manufacturer may request to be included on the approval list by furnishing the SCDOT certified test results from an independent laboratory verifying that the proposed pipe design meets or exceeds the requirements of this specification. This must also include a certification of materials. Further, the manufacturer will furnish complete instructions as to installation along with technical data sheets and material safety data sheets. The approval process may require a demonstration of installation procedures and an in-plant inspection of quality control procedures.

c. Construction Requirements- HDPE
Trench and Bed for Pipe: The trench and bed for the pipe installation shall be in accordance with the latest SCDOT Standard Specifications for Highway Construction. The County defines “width sufficient to allow for proper jointing of the pipe and allow for proper jointing of the pipe and for thorough compaction of the backfill material under and around the pipe” as at least 12” between the pipe and wall of excavation on both sides of the pipe for pipe with dimensions of 15” and 18”. (18”) inch width is necessary between the pipe and wall of excavation on both sides of the pipe with dimensions of 24” to 36” diameter.

Laying Pipe: The pipe shall be laid in accordance with the latest SCDOT Standard Specifications and the manufacturer's instructions.

Joints: Corrugated high-density polyethylene pipe joints shall be the bell and spigot type that ensures a soil-tight joint. A bell may be manufactured either as part of the pipe on one end or separately from the pipe with materials as specified in AASHTO M 294. The bell, if manufactured separately from the pipe, shall be attached to the

pipe when shipped. All joints shall be provided with gaskets. Gaskets shall be preinstalled on the spigot end of the pipe or inside the bell and covered with removable wrap. Gaskets shall be manufactured in accordance with the requirements of ASTM F 477 and shall not have any visible cracking when tested according to ASTM D1149. Split couplers are not approved for use.

Backfilling: Backfilling shall be in accordance with the latest SCDOT Standard Specifications for Highway Construction. Compaction of backfill for the corrugate high-density polyethylene pipe, used outside the county right of way, shall be a maximum of ninety-five percent (95%) of the AASHTO-99 maximum dry density. In these instances a minimum cover of one foot for pipe 15" through 18", and 18 "for pipe 24" to 36" in diameter is required. Corrugated high-density polyethylene pipe used within the county's right of way, shall be backfilled from a 4" stone bedding to a 12" stone bedding over the pipe with CR14 (crusher run) stone and compaction to 95% of standard proctor. Minimum cover shall be eighteen (18") inches for pipes 15" through 48". The minimum cover is measured from the outside top of the pipe to the final grade. The pipe, within the County right of way shall be laid and covered in no more than 100-foot increments. The compacted stone along the pipe-walls will be placed in one lift to the spring-line compacted and tested for pipes with diameters ranging from 15" to 18". For 24"to 36" pipe, stone will be placed and compaction tested in two lifts to the top of the pipe.

d. Testing Requirements- HDPE
Testing shall include compaction and density testing of stone backfill within utility trenches, but may include other material tests as required by the County Engineer or his/her authorized representative.

e. Compaction Testing - HDPE
Applicability-The grading contractor and utility installation contractor, including public utilities and their subcontractors, shall be responsible for providing compaction testing and reporting as described below.

Compaction Requirements-Testing by a geo-technical engineering company shall be performed for all backfill over high-density polyethylene pipes within the right of way. The minimum required compaction shall be 95% Standard Proctor for all trenches within the right of way.

Location and Frequency of Tests-Compaction tests shall be taken at 100 feet intervals and at depths indicated in the "backfilling" section of the specification at each location.

The geo-technical testing firm shall determine the location for tests, and shall obtain prior approval from the County Engineer or his/her authorized representative if the proposed testing frequency is less than shown above. Additional testing in problem areas may be required as directed by the County Engineer or his/her authorized representative.

Reporting-The results of all compaction tests shall be reviewed by the Engineer of Record and forwarded to the County Engineer or his/her representative with comments as necessary. A copy of the overall site plan or the appropriate road plan sheets, showing the test locations and depth below sub-grade elevation, shall be submitted with the test results. The report shall also include the geo-technical testing

firms observations regarding soil condition, weather conditions, moisture content and total stone used as backfill during the installation process. No roadways shall be paved until the County has reviewed and approved the compaction tests results for the section of roadway to be paved.

f. Inspection Requirements- HDPE
Inspections should consist of field visits during pipe installation activities for the purposes of observing activities, and documenting all substandard methods, materials, or conditions. Periodic (key) inspections by the Engineer of Record shall be required during the course of the project, and shall be conducted jointly with the County representative at critical stages of construction. Contractor is responsible for notifying the Engineer of Record prior to the start of installation.

If rain occurred during a period when the high-density polyethylene pipe was uncovered, the geo-technical testing firm must inspect the pipe prior to work resuming to ensure that "no floating" has occurred during the rain event.

g. Inspection Procedures - HDPE
Inspection by Geo-Technical Firm - A Geo-technical firm shall be employed by the contractor for the purpose of providing inspections & testing during the installation of pipe.

Inspection by Engineer of Record - The Engineer of Record will inspect at completion of sub-grade and after major utility installation. The Engineer of Record will verify that all major utilities are installed and trenches are backfilled and compacted. The Engineer of Record will check the catch basin locations and configurations to identify any possible deviations from the plans. The Engineer of Record will review all compaction tests reports and verify the necessary number and location of tests and the required compaction at each location.

Inspections by the County - After installation of the HDPE pipe and prior to the asphalt binder installation, the County Engineer or his/her authorized representative will perform an inspection of the storm drainage system. All lids and covers will be required to be removed for the inspection. The results of the compaction test and geo-technical site inspection report will be provided to the County prior to the installation of binder.

Engineers wishing to use HDPE pipe on County roads must include the above specification on the construction plans.

4. Alternative pipe materials, such as HP pipe, may be approved by the County Engineer or his/her designee on a case-by-case basis.

B. General Inspection Procedures:

1. Design Loading - As a minimum, all pipe materials shall be capable of supporting H-20 loading under minimum cover. All pipe shall also be of sufficient thickness to meet the design load requirements for the proposed cover height. Greater design loadings shall apply to industrial, commercial, or special situations as appropriate.
2. Minimum Cover – Two feet minimum cover shall be required for all pipe materials in the right of way, measured from the outside top of the pipe to the finished subgrade at the lowest point. The County Engineer or his/her authorized representative will

approve variances only if extenuating circumstances exist. In these cases, Class IV or ductile iron will be required.

3. Grade – The Engineer of Record should make all efforts not to design pipe over a 10% slope, especially in the road right of way. In cases where the right of way where steep grades are inevitable, the Engineer of Record should use concrete anchors or other factory recommended anchor systems. These details will be required on the construction plans.
4. Minimum Size – No pipe less than 15" in diameter will be allowed.
5. Installation - All storm drain lines shall be installed in accordance with SCDOT Specifications or County Specifications (stricter specifications will take precedence). A vibratory roller, trackhoe-mounted sheepsfoot roller, or other mechanical tamping device must be used for compacting all utility trenches in the right of way.
6. Greenville County Engineering will support the design and installation of single piped drainage systems. In the case where the Engineer of Record has no choice due to cover restrictions to use dual pipes (double barrel), headwalls will be required. No more than 2 pipes will be allowed at a crossing if a larger pipe or structure cannot be installed due to cover restrictions. The Engineer of Record should make every effort to provide alternatives to dual piped systems.

C. Catch Basins - shall conform to the following standards:

1. Catch basins and aprons shall be constructed as shown in Appendix F, Miscellaneous Design Details, or an alternative configuration may be used upon approval by the County Engineer or his/her authorized representative.
2. Construction materials for catch basins shall be as specified in SCDOT Specifications.
3. All catch basins deeper than 4.5 feet must be constructed with steps.
4. The minimum drop from the edge of the roadway to the throat of the basin shall be 6" for the standard (2') offset from the road. Greater offsets shall require greater drops to achieve the desired 25% cross-slope for the apron.
5. All catch basins along the roadway must have manhole lids.

D. Subsurface Drainage

The following construction requirements shall apply to pipe underdrains:

1. Underdrains shall be constructed as shown in Appendix F, Miscellaneous Design Details, or an alternative manufactured product such as strip or edge drain may be used upon approval by the County Engineer or his/her authorized representative.
2. Underdrains shall be installed within 2 1/2' of the back of the curb and shall be properly connected to a permanent drainage structure such as a catch basin, or daylighted to a suitable location off the right of way.
3. All underdrains shall have a minimum of 2 feet of cover.
4. Underdrains shall be installed prior to the base course.
5. Underdrains are required on both sides of the street where mucking out and backfilling have been done, or where the water table is within 2 feet of the road centerline elevation.
6. Underdrains must be inspected and approved by the County Engineer or representative during installation.
7. Additional underdrains may be required as determined by the County Engineer or his/her authorized representative.

E. Miscellaneous Drainage Requirements

5. Stormwater Management and Permanent Water Quality-For properties being subdivided or developed as part of a larger common plan, Stormwater management and permanent water quality features will be incorporated into the plan. For specific design criteria, see the Stormwater Design Manual.
6. Lake Water Elevations - The water elevation in lakes shall not be higher than 3' below the centerline elevation of the roadway at any time.
7. Damming Structures - No dams or structures serving as dams to impound water, or any portion of such a structure shall be allowed in the right of way. This further means that no County road shall pass over such a structure without approval from the appropriate agencies (Greenville County Land Development Division, DHEC, Greenville County Community Planning, Development and Public Works Department, and Greenville County Engineering).
8. Drainage Outfall into a Lake - The outfall invert elevation must be at least 1 foot above the normal pool elevation of the lake.
9. Stabilization of Open Channels - All open channels used for conveyance of roadway drainage shall be properly stabilized to prevent erosion.
10. All discharge pipe 36" and over shall have a pre-cast headwall or site-built reinforced concrete or masonry headwall.
11. Drainage Easements - Drainage easements of the following widths shall be provided and dedicated for maintenance and public use. All attempts should be made to install pipes in the center of the easement.

Pipe Size	Required Easement Width
15 inches - 30 inches	15 feet
36 inches - 54 inches	22 feet
Over 54 inches	30 feet

   a. For major ditches or channels, the easement width shall be equal to the top width of the ditch plus 12.5 feet on each side (total easement width may vary).
   b. For minor ditches with open channel flow, the required easement width shall be determined from the equivalent pipe size required to carry the flow and the easement width (listed above) corresponding to that calculated pipe size.
   c. The following statement shall be included on the construction plans and final plat:

      "There is a 5'drainage and utility easement along either side of all side lot lines and front lot line. There is a 10'drainage and utility easement along all rear lot lines except where otherwise noted."

12. Rip Rap - Stone shall be hard quarry or fieldstone which will withstand exposure to water and weathering. Refer to Stormwater Design Manual for design.
13. Stormwater Management for Amenity Areas - Any areas noted for future development, which may be intended to contain amenities, will be considered separately from the residential development itself. Therefore, all subsequent drainage plans for these areas must be reviewed and approved by the appropriate County agencies. If, or when, alterations are made to the submitted subdivision drainage plans to meet the requirements for the amenities area, the Engineer of Record shall submit a revised drainage plan showing the effects of such revisions on all phases of the existing drainage system.
14. See Article 17 for additional stormwater management requirements.

6.4.7 Bridges

A. All bridges, tunnels, and underpasses intended for vehicular traffic shall have a minimum length of 20 feet and a clean width of 28 feet. Greenville County reserves the right to request greater widths based on the street classification. All bridge designs shall be subject to the prior approval of the County Engineer or his/her authorized representative.

B. All bridges, tunnels, and underpasses intended for vehicular traffic shall be designed in accordance with the most current edition of the AASHTO "Standard Specifications for Highway Bridges", including any interim specifications and the alternate military loading. Roads & Bridge elevations shall be a minimum 2 feet above Base Flood Elevation in an Area of Special Flood Hazard.

C. A drainage analysis and shop drawings of the proposed bridge will be required for construction review.

6.4.8 Construction Standards for Sidewalks, Curbs, Joints, Patching

A. Sidewalks and Curbing - All proposed street connections to existing streets or highways having existing sidewalks shall be constructed by removal of the sidewalk to the new proposed curb radii.

All intersections and curb ramps shall conform to the requirements of the most recent edition of the ADA guidelines.

1. The concrete shall be batched and mixed in accordance with the provisions in the “Portland Cement Concrete for Structures” section of the SCDOT specifications.
2. Curbs and gutters shall be constructed in uniform sections 10 to 15 feet in length except where shorter sections are necessary for closure, but none less than 4 feet in length.
3. Forms shall not be displaced during concrete pouring and the concrete shall be spaded or vibrated throughout the entire volume especially against forms and joints. The surface of the concrete shall be floated, troweled, broomed, corners edged and finished to the typical cross-section used, i.e. crown sections and/or superelevation.
4. Rolled Curb or Stand Up Curb and Gutter – Curb must provide a 6-inch face against the pavement and the cross sectional shape is approved by the County Engineer or his/her authorized representative. When slip forms are used, the aggregate size, amount of cement, and proportions of all materials for the concrete may vary from previous requirements as necessary to provide a workable and satisfactory mix. Expansion and contraction joints shall be constructed at the same locations as required with formed construction. These joints, spaced at 10 to 15 foot intervals, shall be made by cutting the concrete by an acceptable method. The manner of construction of all joints shall meet the approval of the County Engineer or his/her authorized representative and shall present a workmanlike finish. See sketch as provided in this article.

   a. No obstructions shall be allowed within the limits of the sidewalk area.
   b. Expansion Joints – Preformed expansion joints three-quarter inch thick, extending the full depth of the concrete, shall be constructed at the locations indicated on the plans and at other locations as follows:

      i. Whenever a sidewalk is constructed between an adjoining substantial structure on one side and a curbing on the other side, an expansion joint shall be formed adjacent to the curbing.
      ii. An expansion joint shall be placed between the sidewalk and the radius curbing at street intersections.

iii. When sidewalks are constructed adjacent to existing or new pavements or structures, expansion joints shall be places to match these existing joints.
iv. Transverse expansion joints shall be placed at intervals of not more than 100 feet in all concrete.

c. Contraction Joints – The concrete slabs in sidewalks between expansion joints shall be divided into blocks 10 feet in length by scoring transversely after floating operations are complete. Whenever the sidewalk slabs are more than 10 feet in width, they shall be scored longitudinally in the center. All scoring shall extend for a depth of 1 inch and shall not be less than one-quarter inch nor more than one-half inch in width. All scoring shall be edged and finished smooth and true to line.

B. Patching & Full-Depth Repairs
The following requirements and procedures shall apply for all base failure, binder, and full-depth repairs:

1. For full-depth repairs of finished pavement:

a. Saw cut pavement 12" beyond the extent of distresses to provide clean, unbroken edges.
b. Patches will be cut to have a straight and vertical edge. The sides of the existing asphalt pavement will be clean and thoroughly tacked. The patch will tie into the existing pavement to ensure a smooth transition and ride as well as positive drainage. The cut width shall be of a compactable width or contractor shall use equipment that allows compaction of a cut less than 4 x 4 feet.

2. For all repairs including binder patching:

a. For patched areas in excess of 6" deep, backfill with CR-14 or equivalent.
b. Depths of patches over 4 inches will be performed in two separate lifts.
c. Thickness of binder course must be at least 3".
d. In the case of failures in the repaired area, the County Engineer or his/her authorized representative may require a geotechnical firm to inspect and report recommendations to the developer/contractor in the repaired areas.

6.4.9 Constructing Required Improvements

When constructing the required improvements for the subdivision, the following procedures shall apply:

A. Prior to construction, a set of plans will be submitted for review to the County Engineer or his/her authorized representative bearing a certificate by a registered engineer that the plans comply with the County's Land Development Regulations.
B. During construction, inspections will be conducted in accordance with Section 6.5.3.
C. After completing each phase of road and drainage improvements, the developer shall notify the County Engineer or his/her authorized representative that the improvements are ready for inspection. Upon such notification, the County Engineer or his/her authorized representative shall perform inspections of all required improvements. Upon completion of the improvements, "Record Drawings" shall be submitted with certification that the subdivision's design and construction are in compliance with the County's Land Development Regulations. Certifications are to be made by a registered professional engineer licensed in South Carolina.

D. After completing all public water improvements, the developer shall notify the Greenville Water System where applicable, the Environmental Quality Control Office of the South Carolina Department of Health and Environmental Control ("SCDHEC") and other appropriate district authorities, that the improvements are ready for final inspection.
E. After completing all sewer improvements, the developer's engineer shall certify to the Environmental Quality Control Office of SCDHEC, Renewable Water resources (REWA) where applicable, and the appropriate district authority, that the improvements are ready for inspection. The Environmental Quality Control officers of SCDHEC shall issue a permit to operate for water and sewer before systems are placed into service.
F. In addition to the technical inspections by the appropriate agencies, the Greenville County Land Development Department staff shall make such inspections as necessary to ensure compliance with the Land Development Regulations and the preliminary plan as submitted.

6.5 Testing and Inspections

6.5.1 Description

Testing shall include proofrolling, compaction, and density testing of in-situ base soils, roadway fill areas, backfill within utility trenches, stone base courses, and/or asphalt pavement, but may include other material tests as required by the County Engineer or his/her authorized representative.

Inspections shall consist of periodic field visits during various phases of construction for the purposes of investigating present site conditions & activities, and documenting all substandard methods, materials, or conditions. Periodic (key) inspections by the Engineer of record shall be required during the course of the project, and shall be conducted jointly with the County representative at critical stages of construction.

6.5.2 Testing Requirements

A. Proofrolling

The proofroll is good for 72 hours if no rain events have occurred between the proof roll and the request to pave. The proofrolling shall be performed using a fully loaded tandem dump truck weighing not less than 30 tons gross, or equivalent. Any areas which show visible deflection will be required to be repaired, and a second proofroll may be required prior to verify the repairs. Compaction tests by a geotechnical engineering firm may also be required in problem areas as directed by the County Engineer or his/her authorized representative.

B. Compaction Testing

1. Applicability. The grading contractor and/or utility installation contractor shall be responsible for providing compaction testing and reporting as described below.
2. Compaction Requirements. Testing by a geotechnical engineering company shall be performed for all backfill over utility installations and fill areas in the road right of way. The minimum required compaction shall be 95% Standard Proctor +/- 2% optimum moisture content for the roadways and 98% Standard Proctor for all trench and fill areas within the right of way.
3. Location & Frequency of Tests. Compaction tests shall be taken at random locations and at random depths at each location to provide a range of sampling depths. The required frequency of testing shall be as follows:

a. Sanitary Sewer - Test along the line at 300' intervals, and randomly at service connections at the rate of 1 test per 8 services and at manholes at the rate of 1 test for every 3 manholes. Tests shall be required for all repair work requiring cutting of the asphalt binder course.
b. Water Mains - Test along the line at 300' intervals, and randomly at valve and blowoff locations in the roadway at the rate of 1 for every 3 valve and blowoff locations in the roadway. Test randomly at service connections at the rate of 1 test per 8 services and at manholes at the rate of 1 test for every 3 manholes.
c. Storm Drains - Test along the line at 300' intervals, and at all cross lines.
d. Other Utilities - Test along the line at 300' intervals, and at all road crossings (excluding borings).
e. Fill Areas – Fill should be placed, compacted and tested at no more than 18" intervals. The test shall be performed at 150' intervals, staggered on the left and right sides of the roadway. If bridging in the fill is required, a Geotechnical Engineer will provide a report for recommendations to be submitted to the County Engineer or his/her authorized representative. Additional testing in problem areas may be required as directed by the County Engineer or his/her authorized representative.

Note: The Engineer of Record or geotechnical testing firm shall determine the location for tests, and shall obtain prior approval from the County Engineer or his/her authorized representative if the proposed testing frequency is less than shown above.

4. Reporting. The results of all compaction tests shall be reviewed by the Engineer of Record and forwarded to the County Engineer or his/her authorized representative with comments as necessary prior to the request for proofroll. A copy of the overall site plan or the appropriate road plan sheets, showing the test locations and depth below subgrade elevation, shall be submitted with the test results. No roadways shall be paved until the County Engineer or his/her authorized representative has reviewed and approved the compaction tests results for the section of roadway to be paved.
5. Expiration.
   a. The compaction report expires after 60 days.

C. Asphalt Quality Control

1. During pavement application, the required density for the asphalt shall be achieved by suitable rolling equipment and methods. The contractors will use a highway class paver exceeding 12,000 lbs, a steel wheel front roller of 5 to 8 tons or more, 9 wheel rubber tire intermediate roller, and a 5 to 8 ton steel wheel back roller or equipment the County Engineer or his/her authorized representative deems equal or better. If proper compaction of the asphalt is questionable, the County Engineer or his/her authorized representative may require a series of asphalt density tests to verify proper compaction of the asphalt. The minimum asphalt density shall be 90% of the theoretical maximum density by the RICE method.
2. The County Engineer or his/her authorized representative may require extraction and gradation testing to determine mix composition and verify compliance with SCDOT specifications.
3. Greenville County Mixes for binder and surface asphalt will meet the following criteria: a current SCDOT approved job mix for each facility or an equivalent mix designed and stamped by a Geo-Technical firms' P.E. Hydrated lime will be required in all mixes at the rate of 1% of the dry aggregate.

Table 6.3 Composition Limits for Hot Mix Binder Courses

Required Gradation	
Sieve Designation	**Percentage by Weight Passing**
1 inch	100
¾ inch	97 -100
½ inch	83-100
No. 4	58-95
No. 8	42-62
No. 30	20-50
No. 100	6-20
No. 200	2-10
Note: The amount between any two consecutive sieves smaller than ½ inch shall not be less than 3%. See most recent SCDOT supplemental specs for low volume or secondary roads.	

Percent of Total Mixture	
Asphalt Binder Limits (%)	5.0 – 6.8
Binder Grade	

Required Job Mix Marshall Design Criteria	
Minimum Stability, lbs.	1200
Air Voids, %	3.5-6.0
Flow, 0.01 inch	8-16
Dust/ Asphalt Ratio	0.6-1.2

Voids in Mineral Aggregates	
Nominal Maximum Aggregate	1000
¾ inch	14.0%
½ inch	15.0%

Required Field Marshall Criteria	
Minimum Stability, lbs.	No requirement
Air Voids, %	3.0-6.0
Dust/Asphalt Ratio	0.6-1.2

Table 6.4 Composition Limits for Hot Mix Asphalt Surface Courses

Graduation Requirements – Type 3	
Sieve Designation	**% by Weight Passing**
¾ inch	100
½ inch	97-100
3/8 inch	80-100
No. 4	58-78

No. 8	42-64
No. 30	18-40
No. 100	5-20
No. 200	2-8
Note: The amount between any two consecutive sieves smaller than 3/8 inch shall not be less than 3%	

Percent of Total Mixture	
Asphalt Binder	5.0-6.5

Required Job Mix Marshall Design Criteria	
No. Blows per face	50
Min. Stability, Lbs.	600
Air Voids, %	4.0-6.0
Flow, 0.01 in.	8-16
Dust/ Asphalt Ratio	0.60-1.20
% Voids Filled	68-77

	Minimum VMA, %
Nominal Maximum Aggregate Size	
½ inch	15.0
3/8 inch	16.0
No. 4	18.0

6.5.3 Inspection Procedures

A. Inspections by the Engineer of Record

1. Key Inspections. The following key inspections shall be performed by the Engineer of Record during the course of construction. If any problems are encountered, the necessary repairs will be made at the direction of the Engineer of Record.

   a. Inspection #1 - At Completion of Clearing and Grubbing Operations.
   The Engineer of Record will verify that all organic materials (i.e. stumps, logs, and brush) have been removed from the roadway area. The Engineer of Record will also document any unsuitable soil conditions in the right of way.

   b. Inspection #2 - At Completion of Rough Grading.
   The Engineer of Record will inspect the roadway, especially any fill areas and slopes, to identify unsuitable soil conditions. The Engineer of Record will review the compaction test results in the fill areas to verify that the required compaction has been achieved. The Engineer of Record will check the location of edge of curb to ensure proper road and curb widths are achieved.

   c. Inspection #3 - At Completion of Subgrade & After Major Utility Installation.
   The Engineer of Record will verify that all major utilities are installed and trenches are backfilled and compacted. If unsuitable material is encountered, then the Engineer of Record will document the location of deficiencies, specific correction outlined to the contractor, and material used for correction. This information should be provided to the County Engineer or his/her authorized representative as a part of the reports needed for final acceptance. The Engineer of Record will check the road subgrade for proper elevations, grades, and crown, and will check the catch basin locations and configurations to identify any possible deviations from the plans. The Engineer of Record will review all compaction test reports and verify the necessary number and location of tests and the required compaction at each location.

   d. Inspection #4 - Proofroll.
   The County Engineer or his/her authorized representative shall meet the Engineer of Record on-site to conduct the proofroll prior to binder or stone base installation. All necessary repairs will be made based on the proofroll results.

   e. Inspection #5 - During Binder/Surface Combination or Stone Base Installation.
   The Engineer of Record, his/her representative, or SCDOT Level 2 Asphalt inspector will periodically monitor the paving application in order to provide direction and document the binder or stone base installation. The County Engineer or his/her authorized representative will plan to be on-site, but the County's presence will not relieve the Engineer of Record or Level 2 Inspector of his/her duty to document and certify proper installation. If stone base is used, the Engineer of Record will also certify the application of the prime coat if required.

   f. Inspection #6 - Binder Punch-List Inspection.
   The Engineer of Record and County Engineer or his/her authorized representative shall conduct a thorough punch-list inspection of the roadway, including curbs and catch basins, to identify base failures, broken curbs, broken CB aprons, water valve

and/or manhole cover problems, etc. In the inspection report, the Engineer of Record will detail the items to be corrected and the tentative schedule for repair.

g. Inspection #7 - Follow-Up Inspection Prior to Final Surface Installation.
The Engineer of Record shall meet the County Engineer or his/her authorized representative on-site to go over the repairs to the binder, curbs, and/or catch basins. If all repairs are satisfactory, the final surface will be installed.

h. Inspection #8 - During Final Surface Installation.
The Engineer of Record, his/her representative, or SCDOT Level 2 Inspector will periodically monitor the paving application on-site to provide direction and document the final surface installation. The County Engineer or his/her authorized representative will plan to be on-site, but the County's presence will not relieve the Engineer of Record or other representative of his/her duty to document and certify proper installation of the final surface.

i. Inspection # 9 - Final Punch-List Inspection.
The Engineer of Record, Developer, Contractor, County Engineer or his/her authorized representative and County Maintenance Superintendent or his/her authorized representative shall meet on the site to go over the project. In the inspection report, the Engineer of Record will detail the results of the meeting, any items to be corrected, and the tentative schedule for repair. If repairs are not substantially complete within 45 calendar days, a new punch list may be required.

j. Inspection #10 - Final Acceptance.
The Engineer of Record will meet the County Engineer or his/her authorized representative on-site to go over the finished punch-list items. If all items are complete, the County Engineer or his/her authorized representative will proceed to issue the notice of acceptance.

2. Follow-up and repeat Inspections. The Engineer of Record will be expected to conduct follow-up or repeat inspections as needed to resolve problems or provide the County with complete information and documentation as required above. Please see Construction review and Inspection fee table available at the Greenville County Land Development Division for repeat inspection cost.

B. Inspections by the County

1. Start Up or Pre-construction Meeting.
At the direction of the County Engineer or his/her authorized representative, a start-up or pre-construction meeting will be required to discuss construction issues prior to beginning work. The Engineer of Record, Contractor, Utility Providers and County Engineer or his/her authorized representative will attend the meeting, preferably on-site.
2. Proofrolls.
The County Engineer or his/her authorized representative, or County approved third party Geotechnical Engineer must be on site for the proofroll, and any follow-up proofrolls as required. The County Engineer or his/her authorized representative shall review all compaction test results submitted by the Engineer of Record and must approve the reports before the contractor installs the binder.
3. Storm Drainage Inspection.
After installation of the storm drain system and prior to the binder installation, the County Engineer or his/her authorized representative will perform an inspection of the

storm drainage system. All lids and covers will be required to be removed for the inspection.

4. Binder Punch-list and Follow-up.
   The County Engineer or his/her authorized representative shall meet the Engineer of Record to inspect and prepare a punchlist for the binder, curbs, and catch basins prior to installing the final surface. A follow-up meeting will be held as necessary to review and approve any required repairs.
5. Final Punch-list and Follow-up.
   The County Engineer or his/her authorized representative shall meet the Engineer of Record and others to inspect all aspects of the roadway and drainage system and prepare the final punch list prior to acceptance. A follow-up meeting will be held as necessary to review and approve any required repairs.
6. Paving.
   The County Engineer or his/her authorized representative and Engineer of Record/Level 2, SCDOT Inspector will plan to be on-site during paving installations, but will ultimately rely on the Engineer of Record's inspection report and certification of the paving operation.
7. Follow-up Inspections.
   The County Engineer or his/her authorized representative will make additional inspections of the site as needed to meet with the Engineer of Record, review and approve repairs, or address other problems.
8. Prior Notice for inspections.
   The County inspection can be scheduled with 48-hours notice prior to any of the above key inspections. Failure to provide this advance notice may result in scheduling conflicts, delay of the County's inspection, and possible disruption of the project schedule.

6.5.4 Asphalt Plant & Material Certification

Certification Requirements

A. SCDOT Certified Asphalt Plant. All plants currently on the SCDOT Asphalt Plant Certification list are automatically qualified to supply asphalt materials for proposed County roads.
B. All contractors supplying mix to Greenville County Projects will have a level 2 (or above) SCDOT certified inspector on staff. If a company does not have this individual then he will hire a level 2 Inspector from a Geo-Technical firm while Greenville County mix is being produced to perform proper quality assurance procedures.

6.5.5 Acceptance, One-Year Warranty, and Construction Damage Bond

A. Acceptance
   At completion of all paving, storm drainage system installation, major utility installation, traffic and street sign installation, curbing, sidewalk installation (if applicable) and grassing/mulching of the right of way, the County Engineer or his/her authorized representative shall conduct an inspection of the project or project phase to determine if it is substantially complete. The only exception to the substantially complete requirement would be if the developer elects the sidewalk construction bond option outlined under Section 3.2.6. If the project road(s) in that phase are approved, the County Engineer or his/her authorized representative will notify the Subdivision Administrator that once all the requirements of Article 6 are completed and the Subdivision Administrator has received the

documents in Section 3.2.11, a written notice of acceptance will be issued. The roads may be accepted into the county inventory for maintenance if a financial security is in place for only the remaining sidewalk.

B. One Year Warranty

1. As a condition of the notice of acceptance, the subdivider, either an individual, partnership, corporation, or other legal entity, will enter into an agreement with Greenville County wherein (s)he agrees that (s)he will repair, upon written notification by Greenville County and at his/her own expense, all defects in material and workmanship which occur in the roadways or drainage system accepted by Greenville County pursuant to the granting of such acceptance for a period of one year from the date such work is accepted by Greenville County.
2. The one-year warranty period shall begin immediately after acceptance and shall cover all defects in materials, installation, and workmanship for the roadway pavement, storm drainage system, drainage outfall channels, curbs, sidewalks, grassing/erosion control and traffic and street signage. Any significant problems, failures or defects observed during the warranty period shall be repaired by the developer at his/her expense, as deemed necessary by the County Engineer or his/her authorized representative. Damage caused by construction activity or other external forces is excluded from the one-year warranty, and shall be covered under a separate construction damage fund.

6.5.6 Encroachment Fee

An encroachment fee as part of the Building Permit fee is required by the Greenville County Codes Department. This nonrefundable fee in the amount $60 is charged to account for any damages to the catch basin lids, curb and gutter, roadway or sidewalk due to homebuilding and development and covers the cost of the driveway encroachment.

ARTICLE 7 WATER SUPPLY/SEWAGE DISPOSAL REQUIREMENTS

7.1 Availability of and Approval for Essential Services

All projects that require the development of new public infrastructure that include new facilities or essential services, such as sewers, fire hydrants, potable water, street lighting and similar services, shall obtain required approval of those new services by the service provider prior to final plat approval by Subdivision Administration**.**

Non-availability of essential services shall be grounds for denying permits for development until such services are available. The service provider is not obligated to extend or supply essential services if capacity is not available. If capacity is available, the extension of services shall be by and at the cost of the developer, unless the service provider agrees otherwise. All service extensions shall be designed and installed in full compliance with the service provider's standards for such services, and shall be subject to review, permit and inspection as required by the other policies and ordinances of the service provider.

Availability means capacity for serving a project exists at the time of inquiry. It is not a capacity commitment letter. It does not imply capacity will be available when plans and specifications are submitted to the appropriate service provider. Once the service provider approves final construction plans and specifications a *capacity commitment letter* will be provided to the developer of the subdivision.

Except as provided in Section 3.2.2 - Financial Security Requirements, the following improvements shall have been completed and approved/accepted by the service provider in accordance with the general standards specified below before any final plat of a subdivision shall be eligible for final approval by Subdivision Administration.

7.2 Water and Sewer Systems

7.2.1 General

A. The developer shall be required to install water distribution system, including fire protection, in accordance with the standards, procedures, and policies of the water service provider and applicable fire code provisions and Residential Code for 1 & 2 Family Dwellings, unless documented by the water service provider that the existing line size will not permit the additional service. The extension/upgrading of water lines, as well as the location and spacing of fire hydrants to be installed within a new subdivision will be determined by the water service provider and/or fire district.

B. Should public water system prove not feasible, individual well permits shall be obtained prior to the issuance of a building permit.

C. The developer shall be required to provide public sewage disposal systems in accordance with the standards, procedures, and policies of the appropriate sewer service provider, unless it is documented by the sewer service provider or the sewer treatment authority providing waste treatment, that sewer service and/or sewer treatment is not available

D. Should public sewer system prove not feasible, individual septic tank permits shall be obtained from the Environmental Quality Control office of SCDHEC prior to the issuance of a building permit.

7.2.2 Service Acceptance Procedure

A. Before a preliminary approval is granted by the Planning Commission, preliminary plans for proposed subdivisions of land shall be submitted to the Sewer Treatment Authority and to the service providers for water and/or sewer for their approval to ensure that lines are available for the development to connect to and that the line(s) has the necessary available capacity.
B. For proposed subdivision that will be on a public sewage disposal system construction plans for the collection system will be submitted to sewer service provider and the sewer treatment authority for approval in accordance with their rules and regulations after preliminary approval is granted by the Planning Commission.
C. Prior to approval and recording of the final plat it must be reviewed by:

    1. The sewer treatment authority and the sewer service provider if the subdivision will be using a public sewage disposal system to ensure the lots to be platted are in compliance with the SCDHEC construction permit.
    2. The water service provider to ensure that the lots to be platted are in compliance with their approved plans.

D. Subdivision Administration shall receive written approval from the Environmental Quality Control Office of SCDHEC or an acceptance letter from the public sewer service provider prior to granting approval of the subdivision's final plat. A Preliminary Acceptance Letter from the water service provider prior to granting approval of the subdivision final plat is also required.
E. Final letters that the service lines have been installed according to the construction plans and specification of the service providers must be received by Subdivision Administration prior to releasing the financial security.
F. The addition or deletion of lots within a subdivision may require additional review and approval by the appropriate water and sewer service provider prior to recording the final plat or as well as the recording of a revised final plat.

7.3 Extension of Public Water and Sewer Systems

All extensions of public water and sewer systems, including fire protection systems, shall have the approval of the service providers involved and shall be constructed according to their specifications and under their supervision. Subdivision Administration shall be notified in writing by the Environmental Quality Control office of the SCDHEC and, where necessary, by the appropriate service providers of the acceptance of these extensions prior to granting final approval of the subdivision plat.
Should extended public sewer systems prove infeasible by the service provider, individual permits shall be obtained from the Environmental Quality Control office of SCDHEC prior to the issuance of a building permit.

7.4 Private Water and Sewer Systems

7.4.1 Water

Prior to construction, all community (private) water systems shall obtain a "Construction Permit" from the Environmental Quality Control office of the SCDHEC. The service provider which issues the construction permit should be contacted when construction begins so they can make inspections. Upon completion and prior to placing the water system into service, Environmental

Quality Control will make a final inspection and issue a copy of their "Permit to Operate" to Subdivision Administration. Subdivision Administration must receive a copy of the “Permit to Operate” prior to approval and recording of the final plat.
Should community (private) water systems prove unfeasible, individual permits shall be obtained from the Environmental Quality Control office of SCDHEC prior to the issuance of a building permit.

7.4.2 Sewer

Prior to construction, all community (private) sewer systems shall obtain a "Construction Permit" from the Environmental Quality Control Office of the SCDHEC. In order to make construction inspections, the Environmental Quality Control office will be contacted when construction begins. Upon completion and prior to placing the sewer system into service, Environmental Quality Control will make a final inspection and issue a copy of their "Permit to Operate" to Subdivision Administration. Subdivision Administration must receive a copy of the ”Permit to Operate” prior to approval and recording of the final plat.

7.5 Water or Sewer Systems Not Connected To Municipal or Service Providers

If a water and/or sewer system is not connected to a municipal or service provider and serves an area outside a municipality or district, the responsibility for the operation and maintenance of the total facility must be approved by the Environmental Quality Control office of the SCDHEC and the appropriate agency. This instrument must be recorded in the office of the Greenville County Register of Deeds as required by the SCDHEC.

Developers of systems which lie within the boundary of any legally constituted governmental jurisdiction such as a municipality, water and/or service provider or other authorized service provider must submit written evidence to the Environmental Quality Control office of the SCDHEC that the facility is under the control of the service provider and that the service provider accepts responsibility for the operation and maintenance of the facility.

ARTICLE 8 GENERAL DESIGN STANDARDS

8.1 Intent

The intent of this section is to promote safety and manage impacts of development on surrounding properties and developments through the provision of development standards. The following standards are minimum requirements. Staff may approve improvements that exceed the minimum standard.

8.2 Minimum Lot Size

Lots located in areas where a zoning ordinance is in effect shall conform to the zoning requirements. All other lots shall conform to the minimum of six thousand square feet (6,000 sqft) or sized in accordance with DHEC minimum standards for septic tanks.

8.3 Minimum Lot Frontage (Access to Lots)

All subdivision lots shall have a minimum of 20 feet of access to and frontage on an approved access to a public street or on a private road constructed to current County road standards or unpaved private drive standards. Approved access may consist of rights of access to which a lot is entitled as a portion of a Group Commercial Development, Planned Residential Development or a Mixed-Use Development.

8.4 Newly Created Through Lots

Newly Created Through Lots**,** having frontage on newly created subdivision roads as well as having frontage on existing county or state maintained roads, must be provided access from the newly created road(s) only. Through access between newly created roads and existing roads is not permitted across newly created lots.

8.5 Flag Lots

Flag lots created through the subdivision process, on summary, preliminary, and final plats, must meet the following:

A. The access strip or flag pole shall not be used to calculate the minimum lot area. The front lot setback distance shall be measured from the closest property line parallel to the public road excluding the flag pole.
B. Flag pole lots may not be created deeper than three lots from the existing street.
C. In order to limit the number of encroachments into existing County and SCDOT maintained roads, where multiple flag pole access strips meet the existing roadway, a private access easement must be established for these lots so that only one connection with the existing street is created to serve these lots. The connection with the existing road will meet all applicable Greenville County and/or SCDOT Encroachment Permit requirements and the drive shall be constructed to meet Fire Code Apparatus and Road Access requirements and have an adequate drainage design.
D. Private access easements for flag lots may not serve more than three (3) lots. The subdivider will be responsible for constructing and installing the driveway.
E. The owner/s of lots created in this manner shall be responsible for continued maintenance of the drives. Upon written notification by the Fire Chief or Fire Marshal of the respective fire

protection district, the person/s or entity responsible for maintenance must correct any cited deficiencies within 60 days of receipt of notification of the need for maintenance.

8.6 Reserve Strips

Reserve strips shall not be permitted.

8.7 Building Setbacks

Buildings located in areas where zoning is in effect shall conform to the zoning requirements. Building setbacks in unzoned areas are found in Table 8.1.

Table 8.1 Building Setbacks in Unzoned Areas

Building Setbacks in Unzoned Areas	
Setbacks for all lots located in unzoned areas shall be as follows:	
Residential Subcollector and Access	
Front Setback	20 feet
Side Setback	5 feet (corner lot is 20 feet for side facing street)
Rear Setback	5 feet
Residential Collector	
Front Setback	30 feet
Side Setback	5 feet (corner lot is 20 feet for side facing street)
Rear Setback	5 feet
Minor Arterial, Major Collector, Minor Collector	
Front Setback	40 feet
Side Setback	5 feet (corner lot setback based on front setback for side road type)
Rear Setback	5 feet
Arterial Streets	
Front Setback	50 feet
Side Setback	5 feet (corner lot setback based on front setback for side road type)
Rear Setback	5 feet
Non-Residential or Multifamily*	
Front Setback (Residential Subcollector and Collector)	30 feet
Front Setback (Minor Arterial, Major Collector, Minor Collector)	40 feet
Front Setback (Arterial Street)	50 feet
Side Setback	20 Feet
Rear Setback	20 Feet
**If non-residential use is located next to a non-residential use, setbacks are reduced to 5 feet on sides and rear.*	

8.8 Access and Circulation

The purpose of this section is to support the creation of a highly connected transportation system in order to protect the public health, safety, and welfare in order to ensure adequate access for emergency and service vehicles, connect neighborhoods to each other and to local destinations such as schools, parks, and shopping centers, reduce vehicle miles of travel and travel times; improve air quality; reduce emergency response times; encourage connections to redevelopable property; and free up arterial road capacity to better serve regional long distance travel needs. This does not apply to summary plat subdivisions.

8.8.1 Access for Residential Subdivisions

In order to create a more connected transportation system and accommodate emergency and service vehicles, the following standards shall apply:

A. Any subdivision of more than 30 lots or 50 single family attached dwellings shall provide at least two access points, the second may consist of an emergency access. If the configuration of the property does not allow for a secondary access, the paved surface of the main road shall be at least 26 feet wide to the first intersection.

   If the emergency access will not be a road or driveway, then the access must be shown on the SWPPP. The access will have appropriately designed drainage and a plan/profile to ensure constructability. LID features are encouraged for these types of emergency access points.

B. Subdivisions with greater than 100 lots shall provide at least two access roads to the collector and thoroughfare street network to be built in accordance with Article 5.

C. No more than 100 lots shall be approved on a Final Plat(s) until the required secondary access has been constructed.

D. Subdivisions of 250 lots or more shall provide at least three separate access points. With recommendation from the Traffic Engineer, the Planning Commission may waive the requirement for construction of one access point provided that subdivision design and phasing illustrates the additional required access in a future phase.

E. For subdivisions of 250 lots or more, stub streets may be credited for one of the required access points if two access roads are connected to the existing collector and thoroughfare street network.

F. With recommendation from staff, the Planning Commission may waive these access requirements during the preliminary subdivision review if there are extreme cases where limited road frontage, floodplains, wetlands, riparian buffers, slopes exceeding 11 percent, or other unique site conditions prevent access and will not substantially impact emergency service delivery.

   Subdivisions shall be designed in a manner that Residential Access Streets do not provide direct access from one major collector road to another major collector road creating cut-through traffic.

G. Primary subdivision access roads shall be built in accordance with Table 5.1 Design Standards Chart based on the projected traffic volumes generated from the within the subdivision and as a result of any future connections as determined by the Traffic Engineer.

The adopted Future Land Use Map will be considered to estimate future development potential of adjacent land and project future traffic volumes.

Exhibit 8.1 Minimum Access for Residential Subdivisions

Projected Trip Generation Volume (Vehicle Trips/Day)	Min. # Access Points
10-300	1
301-999	2 (1 can be emergency)
1000-2499	2
2500+	3 (1 can be emergency or stubout)

Traffic volumes are based on ITE Trip Generation Manual

8.9 Street Connectivity

A. New development shall be designed in a manner to provide for multiple street connections to and between local destinations, such as parks, schools, and shopping, without requiring the use of arterial streets.
B. All new developments shall incorporate and continue all collector or residential streets stubbed to the boundary of existing developments and previously approved but un-built developments. Connections may not be appropriate between incompatible uses.
C. Streets, parking areas, and commercial driveways shall be aligned and coordinated with existing or planned streets and drives in existing or future adjacent or contiguous to adjacent development and the general area as to location, widths, grades, and drainage.
D. The arrangement of streets shall provide for the alignment and continuation of existing or proposed streets into adjoining lands in those cases in which the adjoining lands are undeveloped or in which the adjoining lands are developed and include opportunities for connections.
E. Dedicated right-of-ways shall be established for all stub street connections and shall extend to the property line.
F. Blocks longer than 800 feet in length shall have a mid-block pedestrian pathway connecting adjacent blocks.

8.9.1 Stub Streets for Residential Subdivisions

To encourage more walkable neighborhoods, improve access to local destinations, and reduce emergency response times, street rights-of-way shall be extended to or along adjoining property boundaries such that a roadway connection or street stub shall be provided where a subdivision is adjacent to potentially developable land.

Exhibit 8.2 Minimum Stub Streets Required

Projected # of Lots	Min. # stub outs
60 - 300	1
300 - 600	2
601 -1500	3
1501 - 2500	4
2501 - 3600	5
3601 - 5100	6

5101 - 6900	7
6901+	8

Traffic volumes are based on ITE Trip Generation Manual

A. When a stub-out is required, the right-of-way shall be extended to the property line. A notation shall be made on the final subdivision plat that states that the land outside the street right-of-way shall revert to the abutting property owners. The stub-out shall consist of the right-of-way and apron, which includes up to 7' of paved area. The existing developer is required to set aside the right-of-way and construct a 5' apron to the stub-out. The connecting developer is required to build the connection to the apron.
B. Stub streets shall not be required to abut areas where floodplains, wetlands, riparian buffers, green space, slopes exceeding 11 percent, or other unique site conditions prevent a street connection.
C. A temporary turnaround shall be required for all stub streets longer than two hundred (200) feet and serving more than two lots.
D. Stub streets will be clearly marked with signage indicating future connections.

8.9.2 Non-Through Streets for Residential Subdivisions

A. Non-through streets shall have a minimum length of 125 feet and a maximum length of 800 feet. Non-through streets may be extended beyond the 800-foot maximum length to 1200 feet if a pedestrian connection is provided from the end of the cul-de-sac to another street. The pedestrian access should be clearly denoted as a common area. Exceptions may be made in areas where floodplains, wetlands, riparian buffers, green space, slopes exceeding 11 percent, or other unique site conditions prevent a non-through street.

8.10 Traffic Calming

Every effort shall be made to produce a design which will encourage appropriate residential speeds. On residential collectors on which there is a combination of expected traffic volume, length, straight alignment, and/or a design hardship, traffic calming devices will be required. Acceptable traffic calming devices on new streets include but are not limited to raised crosswalks, bulbouts, chicanes, traffic circles, raised intersections, and median islands. See Appendix C for details.

8.11 Half Streets

New half streets shall be prohibited. Whenever an existing half street is adjacent to a tract of land to be subdivided, the other half of the street shall be platted within such tract.

8.12 Reservation of Right-of-Way on County Roads

Any subdivision accessing a County road and/or having lots adjacent to County roads shall accommodate a 25' right-of-way from the centerline of the County roadway for future projects, regardless of existing right-of-way.

8.13 Conformity to the Major Thoroughfare/Transportation Plans

The GPATS Transportation Improvement Program lists roadway projects that are planned for the next 6 years. Subdivisions along these routes shall accommodate the future right-of-way. The developer may reserve the future right-of-way or shall reserve the right-of-way as long as the reserved right-of-way is accommodated in the subdivision plan. Protected GPATS setbacks are available on GIS.

If conceptual design plans indicating right-of-way for a project have been developed by Greenville County or SCDOT (preliminary plans), then that right-of-way shall be reserved by the developer. If final right-of-way plans have been developed, or if the project is under construction or completed, no additional rights-of-way need to be reserved. If right-of-way plans have not been developed, then the following rights-of-way shall be reserved:

A. Planned three lanes-30 feet from centerline
B. Planned five lanes-50 feet from centerline
C. Planned seven lanes-70 feet from centerline

8.14 Clear Sight Distance

A minimum corner sight distance is required to permit drivers entering the higher-order street to see approaching traffic from a long enough distance to allow the driver to decide when to enter the higher-order street, turn onto the higher-order street, and accelerate in advance of the approaching traffic. The entire area of the clear sight triangle shall be designed to provide the driver of the entering vehicle with an unobstructed view to all points 3.5 feet above the roadway along the centerline from point A to point B. The sight distance in feet is determined using the chart below (taken from the SCDOT Highway Design Manual):

Exhibit 8.3 Intersection Sight Distances

INTERSECTION SIGHT DISTANCES
(For Vehicles Approaching from the Left and
For Vehicles Approaching from the Right on a Two-Lane Highway or Street Only)

Design Speed (V_{major}) (mph)	ISD (ft)		
	Passenger Cars	Single-Unit Trucks	Tractor/Semitrailers
15	170	210	255
20	225	280	340
25	280	350	425
30	335	420	510
35	390	490	595
40	445	560	680
45	500	630	765
50	555	700	850
55	610	770	930
60	665	840	1015
65	720	910	1100
70	775	980	1185
75	830	1050	1270
80	885	1115	1350

Note: These ISD values assume a minor road approach grade less than or equal to 3 percent. For grades greater than 3 percent, increase the ISD value by 10 percent.

8.14.1 Sight Triangles

The property lines at all intersections shall have a 25-foot setback from the Point of Intersection (PI) to the Point of Tangent (PT). Each Point of Tangent will be connected to the point of intersection (PI) with a straight line. There will be no radius placed on property lines at any intersection. The triangles will allow for unobstructed lines of sight. The planting of trees or other plantings, or the location of ***structures*** exceeding thirty (30) inches in height that would obstruct the clear sight across the area is prohibited. The county has the right to remove any object, material or otherwise, that obstructs the clear sight.

Exhibit 8.4 Sight Triangles

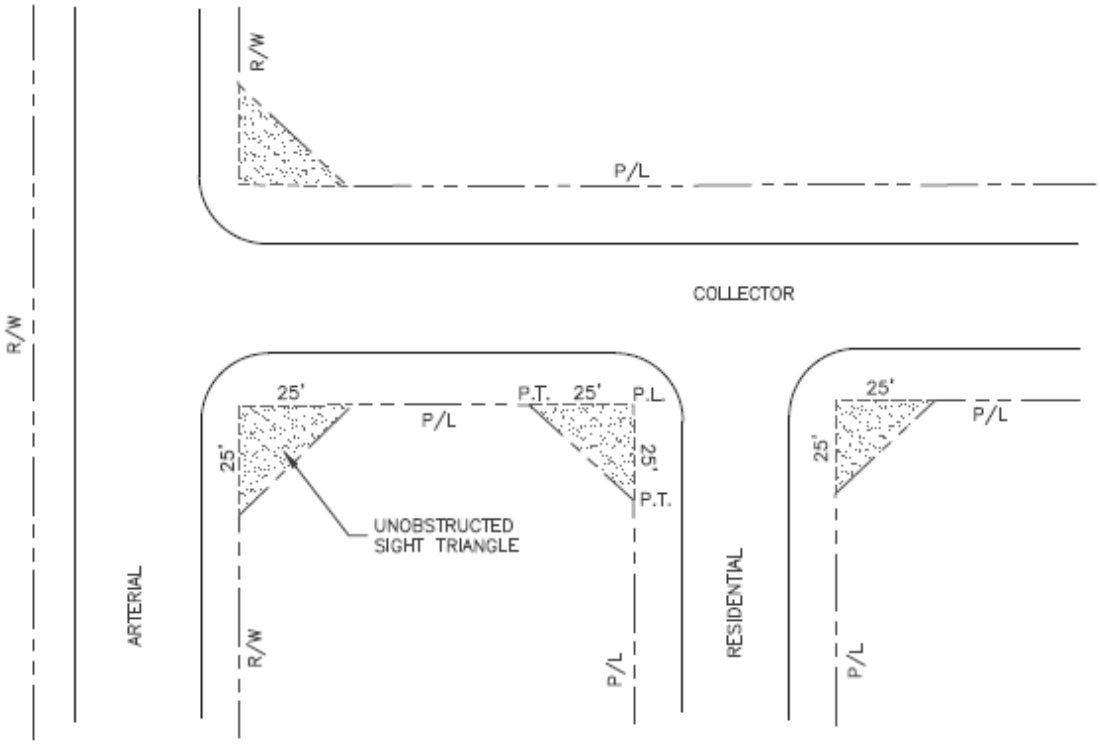

SIGHT TRIANGLE LAYOUT

N.T.S

Exhibit 8.5 Clear Sight Triangles

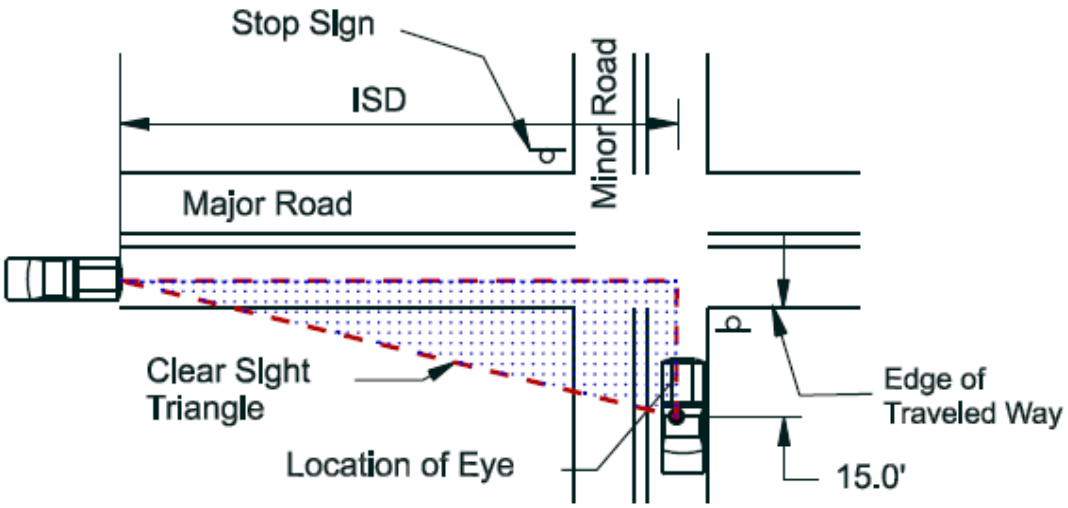

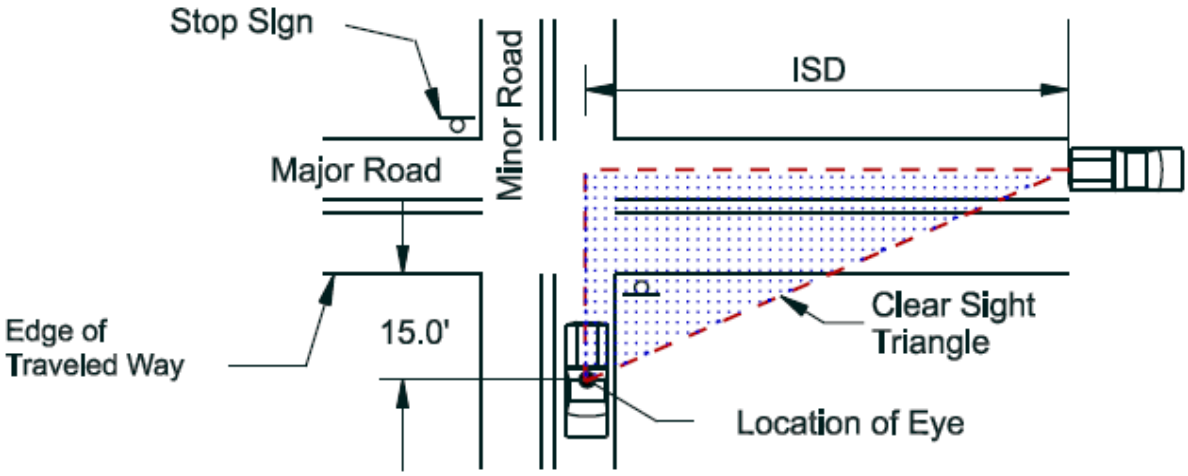

CLEAR SIGHT TRIANGLE FOR VIEWING TRAFFIC APPROACHING FROM THE RIGHT AND LEFT

8.15 Street Names

Proposed street names shall not duplicate or be phonetically similar to existing street names in Greenville County. All street names shall be approved by the Greenville County E-911 Office.

8.15.1 Changes to Street Names

The Planning Commission may, after reasonable notice through a newspaper having general circulation in the area in which the Commission is created and exists, change the name of a street or road within the boundary of its territorial jurisdiction:

A. When there is duplication of names or other conditions which tend to confuse the traveling public or the delivery of mail, orders, or messages;

B. When it is found that a change may simplify marking or giving of directions to persons seeking to locate addresses; or
C. Upon any other good and just reason that may appear to the Department.

All proposed road name changes must be approved through the Greenville County E-911 Office and authorized by the Planning Commission. After the public hearing and with Planning Commission approval, the Subdivision Administrator shall issue a letter notifying the requestor of the designated change, which must then be recorded in the office of the Register of Deeds or Clerk of Court, in order for it to be documented as the legal name of the street or road.

8.16 Street Signs and Markers

The owner or developer initially shall install all required signage including but not limited to street identification signs, regulatory and warning signs, i.e., speed limit signs, and stop signs. Size, placement, and reflectivity shall conform to requirements of the most recent edition of the Manual on Uniform Traffic Control Devices, or otherwise approved by the Greenville County Traffic Engineer. Preferred font is Highway EM at minimum 4.55 inches high with use of capital and lower case lettering. Road numbers and prefixes must be at least 1.5 inches high. Streets may not be named for living persons, per SC Code of Laws. All sign plans must be submitted as a part of the road plan approval submittal process and approved by the Traffic Engineer.

8.16.1 Non-typical Street Signs

Use of non-typical street identification signs will be allowed in conformance with the following:

A. Street name lettering must be mixed-case, 6" (inches) in height for upper-case letters and 4.5” (inches) in height for lower-case letters, evenly spaced and centered. Road ID Numbers shall be at least 1.5” (inches) in height and shall follow the street name.
B. Abbreviations of street names are not permissible.
C. Lettering and background must be contrasting colors and provide reflectability equivalent to engineering grade reflective Scotchlite, Series C as used with traditional greenblade signs. Alternative sign designs must be approved by the Sign Shop Superintendent.
D. Final plat must contain a statement designating that the Homeowners Association is responsible for maintenance of non-typical street identification signs. Any replacement of street identification signs by Greenville County will be with county standard materials.
E. All signage will be inspected by the Land Development Division as a part of the final punchlist to approve the road for acceptance. No streets will be given final approval without the installation of signage that meets minimum county standards. Traffic control/regulatory and warning signs (stop/speed limit signs) must be standard face and in accordance with MUTCD guidelines for color, shape, size and retro reflectivity.

8.17 Easements

8.17.1 Drainage & Utility Easements

A. The width, length, and location of all easements for drainage and utilities shall be established by the appropriate agency involved and shown on the final plat.

B. A 5-foot drainage and utility easement is required on each side of all interior side and rear lot lines. A 10-foot drainage and utility easement is required along all exterior rear lot lines. If an adjoining subdivision has already dedicated a rear 5-foot easement; the 10-foot requirement is reduced to 5 feet.

C. An easement acts as a reciprocal agreement between the subdivision property owners. Each property owner is responsible for maintaining such easement on the property. Drainage and utility easements are intended to be reciprocal easements among the subdivision property owners and not a dedication to the County. Property owners are responsible for keeping easements intact and clear of debris or *structures*. Easements should not be altered in any manner.

8.17.2 Riparian Buffer Easements

A. Preservation of riparian buffers shall be provided by plat and deed restrictions.
B. Any riparian buffers are to be located in common areas within residential subdivisions approved by the Planning Commission through the preliminary plan process.
C. For individual lots created through the summary plat process, preservation of the buffer area shall be by plat and deed restrictions and must be protected during construction.

8.17.3 Conveyance System

A. Offsite stormwater that flows through a proposed subdivision must be routed through a designed conveyance system within a designated easement, preferably through a common area.
B. The conveyance system easements are intended to be reciprocal easements and not a dedication to the County.

8.18 Sidewalks and Crosswalks

A. Sidewalks will be required within all subdivisions within the County under any of the following conditions:

1. Within one and one-half (1.5) miles of a public school (measured along the road from the entrance)
2. On any proposed streets with 40 or more lots,
3. On all proposed streets servicing 75 or more lots (see design standards chart), and
4. On the entrance road(s) of any subdivision meeting the above requirements.

Additionally, sidewalks will be required in any residential subdivision that connects to an adjacent sidewalk or a planned sidewalk as listed in the County's Safe Routes to School, Recreation & Work Plan, GPATS Long Range Plan or any other County-approved plan.

A minimum 5 foot wide concrete sidewalk shall be constructed on at least one side of any residential streets where they are required. Such sidewalks shall be located within the public right-of-way unless otherwise approved. Other alternative walkways and surfaces may be approved on a case-by-case basis that meets the intent of providing connectivity. Sidewalks shall have a 2' minimum grass strip. Catch basins shall be designed to accommodate the sidewalk and stay within the right-of-way. Curb ramps with ADA approved brick-colored or yellow tactile warning devices imbedded in concrete shall be provided where a sidewalk intersects with a street. All sidewalks shall match the associated road grades and curb ramps shall be compliant with the most recent edition of ADA guidelines (Title II).

B. Exceptions may be considered in the following cases:

1. On streets where grades exceed 15%.

2. In RR-1, RR-3 and RS (unless it is a cluster) zoning classifications.
3. If alternate pedestrian paths/walkways accessible by all lots are provided within the subdivision allowing access to amenity areas and existing frontage (in compliance with Section 7.4)

C. Fee-in-lieu program

1. Where a new sidewalk is required to be constructed, the County Subdivision Administrator may waive the requirement that a sidewalk be constructed provided that the applicant makes a written request to the Subdivision Administrator for a waiver.

2. The waiver will be granted under the conditions that the Subdivision Administrator determines that one or more of the following conditions exists and that the applicant pays a fee in lieu of constructing the sidewalk as determined by the average linear foot cost of County sidewalk projects for the most recent 3-year period:

   a. The sidewalk is not identified in any current County-approved plan as a needed pedestrian linkage.
   b. The sidewalk is proposed to be constructed within an existing right-of-way where sufficient right-of-way or easement width does not exist or cannot be dedicated to build the sidewalk.
   c. The sidewalk is identified on any current County-approved plan or is a part of a SCDOT or County-funded project that includes sidewalks.
   d. The sidewalk cost is financially or environmentally prohibitive.

3. In the event that a fee in lieu of constructing a sidewalk is approved, the developer must provide a recorded easement if necessary for the future development of the sidewalk (if outside of the right-of-way). Fee-in-lieu shall be paid at the time of final plat.

   a. Use of fees. All fees collected by the County pursuant to these provisions shall be accounted for separately from other monies, shall be expended only for the construction of sidewalks or other pedestrian improvements in the County and shall be expended within the timeframe as outlined in state law regarding "Fee-in-lieu-of."

D. Prior to the recording of the final plat, the costs of all sidewalks shown on the plans and as noted on the final plat that have not yet been installed shall be included in a the financial security. The developer may elect to have the builder of that lot to construct the sidewalks adjacent (front and side) to that lot. In such cases, the developer shall be responsible for installing all handicap ramps prior to recording the final plat.

E. Access to Community Facilities

1. Pedestrian walkways shall be designed to assure convenient access to parks, playgrounds, schools, transit stops, cluster box units, and other community facilities.
2. Walkway easements shall not be less than 12 feet in width.
3. Walkway or access easements to community facilities shall be shown on the final plat of the subdivision; accordingly such must be delineated both with signage and with on-site physical means such as gravel, asphalt, planted screenings or other appropriate delineators.
4. Drainage should be provided for in accordance with Article 17.
5. Pet stations are required for all walking trails within common areas. Pet stations will be placed at each end of walking trail if not a loop trail.

F. Crosswalks

Where sidewalks terminate at roadway intersections adjacent to other sidewalk-adorned intersections, thermoplastic crosswalks shall be provided. Crosswalks shall be white parallel bars (rails) at least 12 inches wide and 6 feet in length separated no more than 24 inches apart, thus connecting adjacent sidewalks crossing asphalt, or concrete roadway intersections. Alternate materials such as pavers or pervious pavement may be considered for crosswalks with approval from the County Engineer or his/her designee. Alternate materials must be maintained by the Homeowners Association.

8.19 Mailboxes

The local postmaster should be contacted to discuss options for the method of mail delivery for new developments early in the design process. The delivery method will dictate the mailbox type and location; and will require the approval of the Postal Service (USPS) as required by the most current Postal policy.

The type of delivery approved by the local postal manager shall be noted on the development plan (preliminary plat). If Cluster Box Units (CBUs) are selected, the location(s) must be incorporated in the design of the subdivision and shown on the preliminary plat.

The use of concrete filled metal pipe for any mailboxes is expressly prohibited. The installation of a single support is allowed (with approval from the Postal Service) in a configuration of 4 boxes per post. In the case of a single support, non-yielding and non-breakaway mailbox structures will not be allowed. Please see the USPS Guide for Developers for more information.

8.19.1 Curbside Mail Boxes (if allowed)

No mailboxes or other structures may be located within the sidewalk. When mailboxes are placed adjacent to a sidewalk they shall be located in accordance with the specifications shown in the example below.

Exhibit 8.5 Typical Mailbox and Sidewalk Location

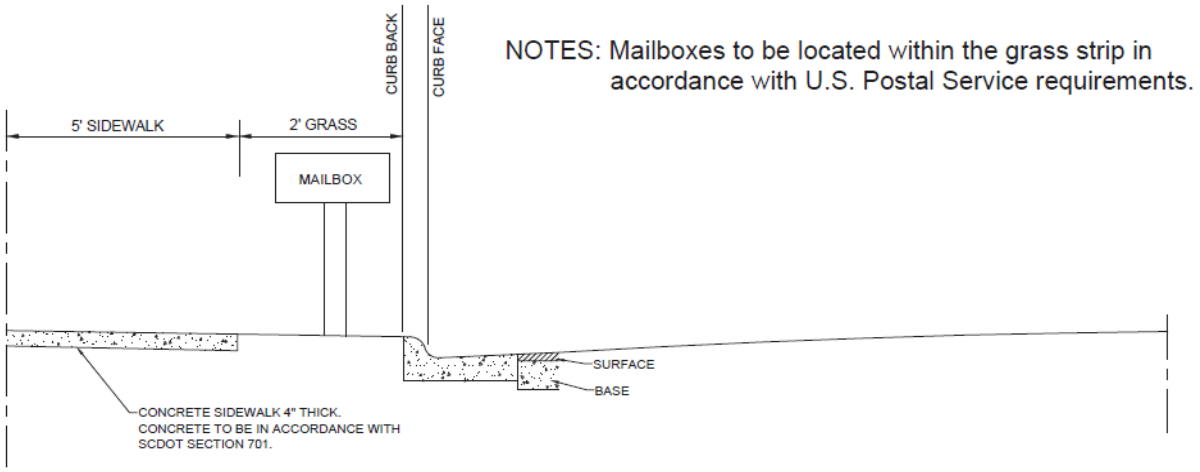

TYPICAL MAILBOX AND SIDEWALK LOCATION

NO SCALE

8.19.2 Cluster Box Units

A. CBU location(s) selected shall be such that there is no disruption or interference with the vehicular traffic flow on the roadway or any public street. Location of the CBU(s) shall be approved prior to the preliminary plan process.
B. CBUs shall not be installed so close to an intersection or traffic lane that they block visibility for approaching traffic or could be struck by a passing motor vehicle.
C. CBUs shall not be located on dead-end streets where there is no safe turnaround for Postal delivery vehicles.
D. CBUs must be installed facing the correct direction. CBUs installed on concrete pads poured behind the sidewalk shall face the sidewalk. CBUs installed on concrete pads located in landscape strips between the curb and the sidewalk shall face the sidewalk. Do not install CBU facing the curb or street—causing the carrier and the customer to stand in the street to deliver or retrieve mail.
E. The preferred location of the CBUs would be in common/amenity areas and conducive to both pedestrian and vehicular traffic. Provide one (1) parking space per fifty (50) homes being served.
F. If an amenity area is not available for use, CBUs may be placed within eyebrow islands provided that:

    1. Individual lot access is not situated adjacent to the eyebrow;
    2. Length of the road on eyebrow provides for adequate stacking;
    3. Sidewalk accessibility is available to the island;
    4. Ownership and maintenance of structure(s) within the island is the responsibility of the homeowners association. Greenville County does not maintain islands or structures within islands.
    5. See example below:

Exhibit 8.6 Example of Cluster Box Units

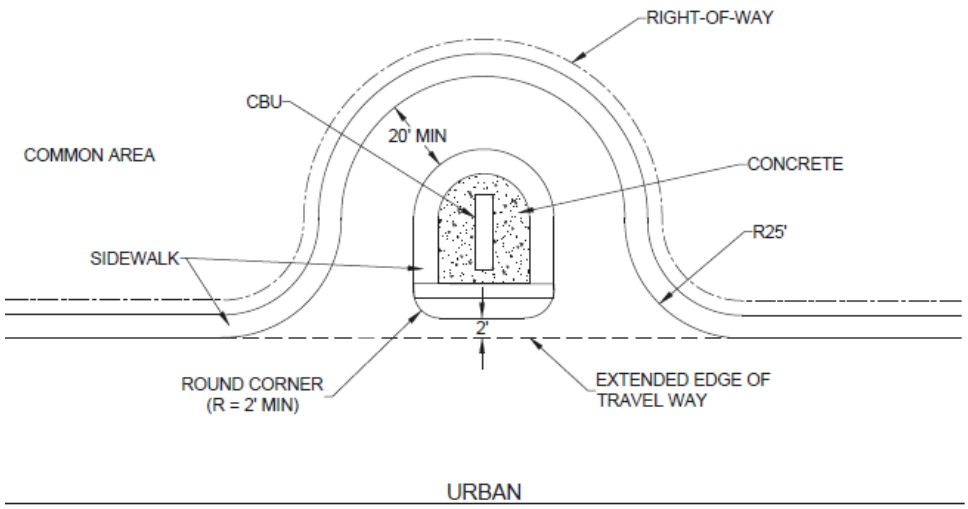

G. CBUs must not be installed until the local USPS representative has ensured compliance with the official specifications.
H. Please refer to the USPS Guide for Developers for specifications on the construction of CBUs, including the concrete pad.

Exhibit 8.7 Cluster Box Units Installation Examples

CORRECT – NOTE HOW MUCH CONCRETE WAS REQUIRED IN ORDER TO MEET LOCAL CODES

INCORRECT - THE ADA REQUIRES THAT SIDEWALKS REMAIN CLEAR

CORRECT – PLAN AHEAD. THIS PAD WAS ACTUALLY POURED BEFORE THE SIDEWALK WAS PUT IN. THE DIMENSIONS, ELEVATION, AND SLOPE WERE CALCULATED TO MATCH THE FUTURE SIDEWALK

CORRECT - WHEELCHAIR ACCESSIBLE. SET BACK FROM THE ROADWAY. EASY ACCESS FOR THE CARRIER.

Please refer to the USPS Cluster Box Guide for more information and latest updated document.

8.20 Entrance Walls

If a developer elects to have an entrance wall where it intersects with existing roadways, these walls shall comply with the County's Sign Ordinance or the Subdivision Screening requirement. Entrance walls shall be placed outside of the right-of-way.

8.21 Forested Natural Vegetative and/or Landscaped Buffer

The intent is to protect the privacy of existing and future residences that adjoin new subdivision/commercial developments. A natural vegetative or landscaped buffer of at least 20 feet wide and of density to achieve the privacy intent must be provided along all sides of the property adjoining residential and commercial developments.

The new buffer may be counted towards the developable open space in a residential cluster project. Existing natural vegetative buffers shall not be disturbed and shall be used to meet the 20 foot requirement. Streams, wetlands and/or riparian buffers may be overlaid with this buffer, and the greater width requirement shall prevail. The natural vegetative buffer shall contain mature hardwoods, evergreens, and/or a variety of both and be protected during construction. Should any trees sustain damage during construction suitable replacements as determined by the County shall be installed prior to final platting or first building permit whichever is first. If a natural vegetative buffer does not exist or is not 20 feet wide, the following landscaping, and buffer provisions will apply:

A natural vegetative buffer less than 20 feet wide shall be expanded/enhanced to meet the 20 foot minimum width with additional deciduous and evergreen trees. In the event there is no natural vegetative buffer, planted deciduous (canopy) or evergreen trees shall be used to create the buffer. In either case, canopy trees shall not be placed closer than 15 feet on center and evergreen trees shall not be placed closer than 10 feet on center. The goal is to have continuous canopies touching at mature size. Any tree planted in the buffer area must be at least 6 feet in height for evergreens and 1.5 diameter for canopy trees (minimum height of 6 feet) at the time of planting. Trees planted within the buffer shall be staggered to provide optimal coverage within the buffer and to attain the 20 foot width requirement. All natural vegetative buffers or landscaped buffers as listed above shall be maintained as in – situ vegetation and free from development. Use of the buffers is restricted to only road crossings, bike paths and greenway trails or walkways not to exceed 10 feet in width. Removal of invasive species within the buffer is allowed.

In Centers and Corridors as identified in the most recent County Comprehensive Plan, as amended, a smaller buffer (no less than 8’ wide) with a combination of fence, berm and/or vegetation may be allowed along road frontages with approval from staff. In rural communities as identified in the most recent County Comprehensive Plan, as amended, and other areas where sites have steep slopes (11% or more) or other unique site conditions, a reduced buffer or combination of elements may be considered, as determined by staff.

Any newly planted trees, fencing, berms or other buffer elements shall be installed within 18 months from the date site work is commenced. The County has the authority to postpone required tree planting until the appropriate planting season.

Appropriate sight distance triangles and sight lines shall be maintained at all intersections.

A tree warranty for newly planted trees must be provided by the contractor or developer, who must adequately maintain all trees for the first year of planting. During the warranty period the contractor or developer is responsible for replacing any newly planted dead trees as well as any dead trees within the natural vegetative buffer.

The buffer shall carry a perpetual easement maintained by the Homeowners/Property Owners Association which shall be assured through the restrictive covenants of the Homeowners

Association/Property Owner Association and/or associated documents. Post warranty the HOA/POA is responsible for replacing any dead trees needed to meet the buffer requirements.

ARTICLE 9 TRAFFIC IMPACT STUDIES

9.1 Intent

A traffic impact study (TIS) evaluates the effect a development's traffic may have on existing roads. For the purposes of this ordinance, the implementation pertains to County-maintained roads. Projects on state roads must comply with the DOT's Access & Roadside Manual; however the SCDOT Traffic Requirements form must be completed and submitted to Greenville County. The TIS helps identify significant impacts on safety, traffic and transportation operations. Ultimately, the TIS can be used to assess if the scale of the development is appropriate for a particular site and what improvements may be necessary, on and off the site, to provide safe and efficient access and traffic flow.

A TIS will be required for large developments such as major shopping centers, large planned developments, industrial complexes and any other projects that would generate 100 or more trips during the peak hour of the traffic generator or the peak hour of the adjacent street. Any change or expansion at an existing site that results in an expected increase of 25% or more peak hour trips may also require a TIS. The estimated number of trips for the sites will be based on the latest edition of the Institute of Transportation Engineers (ITE) *Trip Generation Manual*. Table 9.1 below gives examples of land use size thresholds that might be expected to generate 100 peak hour trips that may be used to determine whether a study will be required (based on 7th edition of the *ITE Trip General Manual*.)

Table 9.1 Guidelines for Determining need for TIS

Land Use	100 Peak Hour Trips*
Single Family Home	90 units
Apartments	150 units
Condos/Townhomes	190 units
Mobile Home Park	170 units
Shopping Center -Gross Leasable Area (GLA)	16,000 s.f.
Fast Food Restaurant with Drive In - Gross Floor Area (GFA)	2000 s.f.
Gas Station with Convenience Store	7 fueling positions
Banks with Drive-In (GFA)	4000 s.f.
General Office	67,000 s.f.
Medical/Dental Office	29,000 s.f.
Research & Development	71,000 s.f.
Light Industrial/Warehousing	185,000 s.f.
Manufacturing Plant (GFA)	144,000 s.f.

*Rates/equations used to calculate above thresholds are for the AM or PM Peak Hour of the adjacent street, whichever is greatest.

9.2 Study Requirements

A. A TIS shall be under the direct charge of and sealed by a registered SC Professional Engineer with expertise in traffic engineering. An impact study shall analyze traffic conditions for the existing year conditions, build-out background year "no build" conditions, and build-out year "build" conditions. The study will be used to assess the need for changes in traffic control devices and roadway improvements necessary to accommodate the new development traffic. The study must also justify the proposed access plan and demonstrate the effects of the development on public roadways. The study area will be limited to a maximum of 3 peak hours and not to exceed adjacent or nearby 3 intersections within ½ mile radius from the property boundary. A study area site map showing the site location is required.

B. Proposed Land Use
Provide a description of the current and proposed land use including characteristics such as the number and type of dwelling units, gross and leasable floor area, number of employees, and detailed site plan.

C. Existing Conditions
Provide a description of existing traffic conditions including existing peak-hour traffic volumes adjacent to the site and levels of service for impacted intersections in the vicinity. Use existing signal timings and AM/PM peak hour counts unless otherwise determined (i.e. school or special events). Data should reflect maximum usage periods for seasonal and daily variations. Existing counts may be used that are no more than 12 months old.

D. Future Background Growth
Estimate future background traffic growth. The growth factor should be determined from local data. Include any approved local, state or private improvements within the study area that will be underway in the build-out year and traffic generated by other proposed and approved developments in the study area. (Build-out year plus one year)

E. Trip Generation
The site forecasted trips should be based on the most recent edition of the ITE Trip Generation Manual. A table should be provided in the report outlining the categories and quantities of land uses, with the corresponding trip generation rates or equations, and the resulting number of trips. The reason for using the rate or equation should be documented. For large developments that will have multiple phases, the table should be divided based on the trip generation for each phase. Any reductions due to internal trip capture and pass-by trips, transit use, and transportation demand management should be justified and documented. All trip generation and trip reduction calculations and supporting documentation shall be included in the report appendix.

F. Trip Distribution and Assignment
The distribution (inbound versus outbound, left turn versus right turn) of the estimated trip generation to the adjacent street network and nearby intersections shall be included in the report and the basis should be explained. The distribution percentages with the corresponding volumes should be provided in a graphical format.

G. Capacity Analysis
Provide a table detailing delay and level of service in the study area for existing conditions, build-out year without development, and build-out year with development. Intersection analysis shall include LOS determination by movement for all approaches. The level of

service shall be based on the procedures in the latest edition of the Transportation Research Board's Highway Capacity Manual.

H. Recommended Improvements
Outline any recommended improvements that will improve access and traffic flow for the additional traffic created by the development, and provide capacity analyses to document that improvement. Improvements to existing infrastructure adjacent to the development may be required of the developer as a condition of issuance of any permit for grading or construction.

9.3 Responsibility for Mitigation

The developer of a site will be responsible for making roadway improvements and installing traffic control devices that may be necessary due to the impacts on the new development based on the recommendations from the study. These include impacts through the study area of the development wherever possible. If additional right-of-way is required as a result of the study, the developer shall make a reasonable effort to obtain the necessary right-of-way to perform the recommended improvements , including offering an amount as appraised by a licensed SC real estate appraiser. If right-of-way cannot be obtained, the developer is required to make a written request to the appropriate county staff for a waiver, including documentation of the "fair market value" offer. The waiver will be granted under the conditions that county staff determines that one or more of the following conditions exists and that the applicant pays a fee in lieu of constructing the recommended improvements (including right-of-way acquisition) as determined by the average cost of similar projects for the most recent 3-year period:

A. The project will be in conflict with an approved and funded GPATS, SCDOT, C-Funds or County project.
B. The project is proposed to be constructed where sufficient right-of-way cannot be obtained.
C. The reasonable offer is not accepted.
D. The project cost is environmentally prohibitive.

Use of fees. All fees collected by the County pursuant to these provisions shall be accounted for separately from other monies, shall be expended only for any necessary road improvements and shall be expended within the timeframe as outlined in state law regarding "Fee-in-lieu-of."

Table 9.2 Examples of Mitigation Measures

Mitigation Category	Mitigation Measure
Roadway Improvements	• Repaving/re-striping • Realignment of streets (immediately adjacent to site) • Improve sight distance • Minor Widening to provide access to development's access points • Intersection improvements • Acceleration/deceleration lanes • Left-turn lanes • Traffic signals (must meet MUTCD warrants)

	• Median crossovers • Building new roadways for interconnectivity
Access Management Improvements	• Increase driveway spacing • Relocate driveways or intersections • Provide multiple entrances on different roads • Reduce the number of driveways • Install medians • Shared access • Connections to existing roads or developments
Operational Improvements	• Modify signal timing or phasing • Improve signal progression • Install signage

9.4 Mitigation Alternatives

The traffic impact study will help to determine what, if any, mitigation measures are needed and applicable on County roads. Mitigation will only be required if the LOS increases higher than LOS C, if SCDOT left-turn lane guidelines are met, or if the delay for any movement increases by 25% or more.

Additionally, improvements may be required if a project is located in a "high-growth corridor" as identified by County Planning and Engineering Staff. "High-growth corridors" are identified as roads or groups of roads (and intersecting streets when applicable) in areas that have experienced at least 1.5% annual population growth, or roads/intersections currently operating at LOS D or higher.

Mitigation measures are not limited to physical improvements. It can include operational improvements along the roadway, at off-site intersections and site access points, as well as programs and incentives designed to specifically alter travel behavior, or a combination of measures. Table 9.2 above outlines some examples of mitigation measures.

9.5 Staff Approval

The County Traffic Engineer will evaluate the study and provide recommendations to appropriate county staff; therefore, early contact with the Traffic Engineer is recommended. For group developments, commercial or residential subdivisions being submitted as a part of the preliminary plan process and on a County road, the TIS should be submitted to the Subdivision Administrator as a part of the preliminary subdivision submittal package. For the above developments on a state road, the SCDOT Traffic Requirements Form shall be submitted no later than 10 days after the SAC meeting. For stand-alone commercial projects, the TIS should be submitted during the land disturbance permit submittal process. The County may also require a TIS or Left-Turn Lane Study at rezoning during the submittal process if the development is expected to generate 150 or more peak hour trips.

ARTICLE 10 GENERAL DEVELOPMENT STANDARDS FOR INDUSTRIAL, COMMERCIAL, MULTI-FAMILY RESIDENTIAL AND MIXED-USE DEVELOPMENT

10.1 Intent

The intent of this section is to promote safety and manage impacts of non-single-family development on surrounding properties and developments through the provision of development standards regulating vehicular and pedestrian access, screening and buffering, and site lighting.

10.2 Industrial Design Standards

These standards shall apply to all new uses, structures, or developments engaged in large scale processing, manufacturing, compounding, assembling, packaging, treatment, or fabrication of materials, products, or goods from raw materials or from processed or previously manufactured materials.

10.2.1 Emergency and Fire Access

A. Each structure greater than 30 feet or 3 stories in height shall be accessible by fire apparatus from 3 sides, as outlined below. This section shall not apply if the building is equipped with an approved automatic sprinkler system.
B. Two accesses suitable for emergency vehicles shall be provided when buildings or facilities have a gross area of more than 62,000 square feet. When all buildings of a project are equipped with an approved automatic sprinkler system, a single approved fire apparatus access way is allowed provided the gross building area does not exceed 124,000 square feet.
C. When two emergency accesses are required, they shall comply with the minimum applicable County or SCDOT standards.
D. Emergency accesses capable of accommodating aerial apparatus shall be constructed when buildings exceed 30 feet in height above the lowest level of fire department access. Such accesses shall be a minimum of 26 feet unobstructed width.
E. For buildings exceeding 30 feet in height, at least one aerial apparatus access route (minimum 26-ft width) shall begin between 15-30 feet from the building. This route shall extend to within 150 feet of any combustible construction.
F. If the emergency access will not be a road or driveway, then the access must be shown on the SWPPP. The access will have appropriately designed drainage and a plan/profile to ensure constructability. Low Impact Development (LID) features are encouraged for these types of emergency access points.
G. When required, a detailed channelization island plan shall be submitted for review prior to construction. Channelization island design will be reviewed on a case by case basis due to differing roadway and traffic characteristics. (See Exhibit 10.1)

Exhibit 10.1 Channelization Island

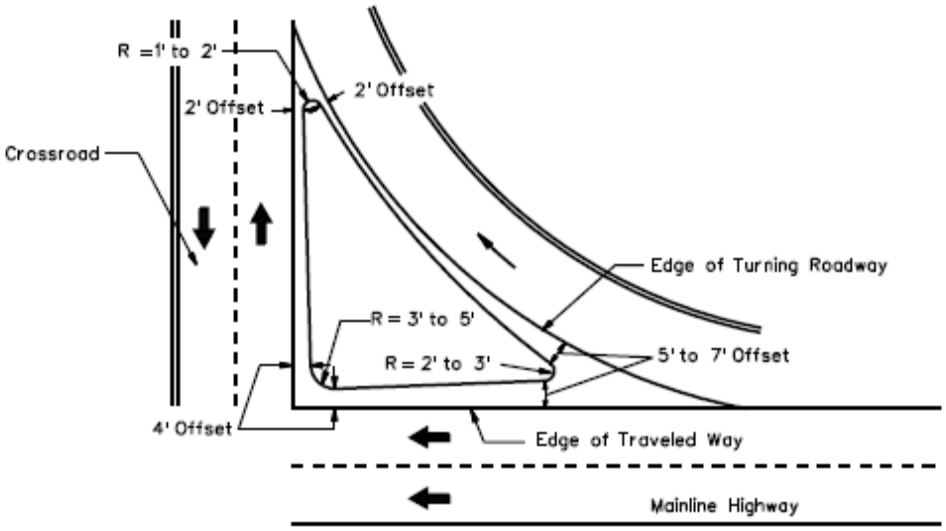

10.2.2 Screening/Buffering

Industrial uses are required to provide a wall, fence, compact evergreen hedge or other type of evergreen foliage, or a combination of fence and shrubbery at least 6 feet in height alongside and rear exterior lot lines where located adjacent to a residential use (and/or district) for the purpose of screening non-residential activities from view. Additionally, a 15-foot landscaped buffer along the exterior property lines adjacent to residential uses and districts shall be maintained.

10.2.3 Lighting

In order to reduce light trespass and light pollution, the following standards shall apply.

All lighting within 30' of a property line with adjacent residential property shall use downward and/or inward facing fixtures and/or utilize light shields to limit light trespass onto adjoining properties. Sites that utilize light fixtures of greater than 400 watts and/or 25,000 lumens shall provide a photometric plan to confirm that there is no more than 0.5 foot-candle at the property line with adjoining residential property.

Table 10.1 Industrial Lighting Pole and Fixture Requirements

Wattage	Max. Mean Lumens	Cut-Off Requirements	Max. Pole Height
0-175	15,000	Non Cut-off	18'
176-400	27,000	Semi cut-off*	30'
400-1000	100,000	Cut-Off**	40'
1000+	Unlimited	Full cut-off***	40'

*Semi Cut-off fixtures will have no more than 5% lamp lumens above the horizontal plane
**Cut-off fixtures will have no more than 2.5% lamp lumens above the horizontal plane

***Full Cut-off fixtures will have no lamp lumens above the horizontal plane

10.2.4 Pedestrian Facilities

A. Continuous, safe, pedestrian walkways at least five (5) feet wide shall be provided from parking area and adjacent public sidewalks to building entrances.
B. Internal pedestrian connections shall take into consideration connectivity to public right-of-way for facilitating access to existing or future transit.

10.3 Commercial Design Standards

These standards shall apply to all new business, office, mercantile, assembly (gathering), educational, institutional, or storage uses, structures, or developments; excluding industrial, governmental, quasi-governmental, and utility uses, structures, or developments.

10.3.1 Vehicular Cross Access

Vehicular cross-access requirements are to apply to areas of the unincorporated County designated by the Future Land Use Map as a Corridor or Center or as identified in any other relevant portion of the Greenville County Comprehensive Plan or other plans relating to transportation facilities.

To encourage shared access points and shared parking for adjacent uses along major thoroughfares, site plans prepared for all new commercial and mixed-use development shall comply with the following standards:

A. Internal vehicular circulation areas shall be designed to allow for cross-access to adjacent lots with multifamily residential, nonresidential, or mixed-uses.
B. A stub for future cross access shall be provided and constructed to the property line from the vehicular use area to all adjacent vacant land designated for multifamily residential, nonresidential, or mixed-uses.
C. A minimum distance of 40 feet shall be required between a cross-access way and driveway entrance apron.
D. Cross-access ways shall allow for two-way traffic between parcels through the use of a single drive aisle with a minimum width of 24 feet or through two one-way aisles each with a minimum width of 12 feet. The maximum median separation width shall be 15 feet with a left-turn pocket or four (4) feet without a left-turn pocket.
E. A cross-access easement must be recorded as a condition of approval for the final plat of the development or prior to issuance of certificate of occupancy.
F. Planning and Code Compliance Department staff may waive these cross-access requirements in cases where floodplains, wetlands, riparian buffers, slopes exceeding 11 percent, vehicular safety factors, or other unique site conditions prevent cross-access. The applicant must provide proof of these conditions.

10.3.2 Emergency and Fire Access

A. Each structure greater than 30 feet or 3 stories in height shall be accessible by fire apparatus from 3 sides, as outlined below. This section shall not apply if the building is equipped with an approved automatic sprinkler system.
B. Two accesses suitable for emergency vehicles shall be provided when buildings or facilities have a gross area of more than 62,000 square feet. When all buildings of a project are equipped with an approved automatic sprinkler system, a single approved fire apparatus access way is allowed provided the gross building area does not exceed 124,000 square feet.

C. When two emergency accesses are required, they shall comply with the minimum applicable County or SCDOT standards.
D. Emergency accesses capable of accommodating aerial apparatus shall be constructed when buildings exceed 30 feet in height above the lowest level of fire department access. Such accesses shall be a minimum of 26 feet unobstructed width.
E. For buildings exceeding 30 feet in height, at least one aerial apparatus access route (minimum 26-ft width) shall begin between 15-30 feet from the building. This route shall extend to within 150 feet of any combustible construction.
F. If the emergency access will not be a road or driveway, then the access must be shown on the SWPPP. The access will have appropriately designed drainage and a plan/profile to ensure constructability. Low Impact Development (LID) features are encouraged for these types of emergency access points.
G. When required, a detailed channelization island plan shall be submitted for review prior to construction. Channelization island design will be reviewed on a case by case basis due to differing roadway and traffic characteristics. (See Exhibit 10.1)

10.3.3 Pedestrian facilities

Pedestrian facilities requirements are to apply to areas of the unincorporated County designated by the Future Land Use Map as a Corridor or Center or as identified in any other relevant portion of the Greenville County Comprehensive Plan or other plans relating to transportation or pedestrian facilities.

A. Sidewalks shall be provided along all sides of the development that abut a public street.
B. The internal walkways shall be distinguished from driving surfaces through the use of design features such as: special pavers, bricks, or scored concrete or stamped asphalt to enhance pedestrian safety. Striping may be used for driveway crossings.
C. Continuous, safe, pedestrian walkways at least five (5) feet wide shall be provided from parking areas, transit stops and adjacent public sidewalks to building entrances.
D. Pedestrian connections shall be provided between adjacent developments or land uses.
E. Internal pedestrian connections shall take into consideration connectivity to public right-of-way for facilitating access to existing or future transit.
F. If the sidewalk connection is not feasible due to restrictions by the maintaining agency or other limiting factors as identified by staff, the sidewalk requirement may be removed at the staff level.

10.3.4 Trash Collection Facilities and Service Areas

Trash collection and service areas/loading docks must be incorporated into the overall design of the development so as to minimize the visual and acoustic impacts of these functions from adjacent properties and public streets. Trash collection and service areas that can be viewed from public roads or adjoining residential or commercial properties shall provide a six (6) foot tall opaque wall around the facility; trash areas shall have a durable opaque metal gate. These areas shall complement the principal building architecture to the extent possible.

10.3.5 Screening/Buffering

Commercial uses are required to provide a wall, fence, compact evergreen hedge or other type of evergreen foliage, or a combination of fence and shrubbery at least 6 feet in height along the side and rear exterior lot lines where located adjacent to a residential use (and/or district) for the purpose of screening non-residential activities from view. Additionally, a 15-foot landscaped

buffer along the exterior property lines adjacent to residential uses and districts shall be maintained.

10.3.6 Lighting

In order to reduce light trespass and light pollution, the following standards shall apply to all non-residential and multi-family development:

All lighting within 30' of a property line with adjacent residential property shall use downward and/or inward facing fixtures and/or utilize light shields to limit light trespass onto adjoining properties. Sites that utilize light fixtures of greater than 400 watts and/or 25,000 lumens shall provide a photometric plan to confirm that there is no more than 0.5 foot-candle at the property line with adjoining residential property.

Table 10.2 Commercial Lighting Pole and Fixture Requirements

Wattage	Max. Mean Lumens	Cut-Off Requirements	Max. Pole Height
0-175	15,000	Non Cut-off	18'
176-400	27,000	Semi cut-off*	30'
400-1000	100,000	Cut-Off**	40'
1000+	Unlimited	Full cut-off***	40'

*Semi Cut-off fixtures will have no more than 5% lamp lumens above the horizontal plane
**Cut-off fixtures will have no more than 2.5% lamp lumens above the horizontal plane
***Full Cut-off fixtures will have no lamp lumens above the horizontal plane

10.3.7 HVAC Screening

Depict all ground-, wall-, and roof-mounted mechanical equipment, HVAC, emergency generators, and other accessories (including satellite TV, electronic data dishes and antennae) as dashed lines on the plan. All of these facilities shall be screened from public roads, adjoining residential or commercial properties. Rooftop equipment shall be screened by a parapet or other architectural element that is equal to the maximum elevation of the equipment and is complimentary to the building's architecture.

10.4 Multifamily Design Standards

10.4.1 Vehicular Access

Vehicular access requirements are to apply to areas of the unincorporated County designated by the Future Land Use Map as a Corridor or Center or as identified in any other relevant portion of the Greenville County Comprehensive Plan or other plans relating to transportation facilities.

To encourage shared access points and shared parking for adjacent uses along major thoroughfares, site plans prepared for all new multifamily residential developments shall comply with the following standards:

A. Internal vehicular circulation areas shall be designed to allow for cross-access to adjacent lots with multifamily residential, nonresidential, or mixed-uses.
B. A stub for future cross access shall be provided and constructed to the property line from the vehicular use area to adjacent vacant land designated for multifamily residential, nonresidential, or mixed-uses.
C. A minimum distance of 40 feet shall be required between a cross-access way and driveway entrance apron.
D. Cross-access ways shall allow for two-way traffic between parcels through the use of a single drive aisle with a minimum width of 24 feet or through two one-way aisles each with a minimum width of 12 feet. The maximum median separation width shall be 15 feet with a left-turn pocket or four (4) feet without a left-turn pocket.
E. A cross-access easement must be recorded as a condition of approval for the final plat of the development or prior to issuance of certificate of occupancy.
F. Planning and Code Compliance Department staff may waive these cross-access requirements in cases where floodplains, wetlands, riparian buffers, slopes exceeding 11 percent, vehicular safety factors, or other unique site conditions prevent cross-access. The applicant must provide proof of these conditions.

10.4.2 Pedestrian facilities

Pedestrian facilities requirements are to apply to areas of the unincorporated County designated by the Future Land Use Map as a Corridor or Center or as identified in any other relevant portion of the Greenville County Comprehensive Plan or other plans relating to transportation or pedestrian facilities.

A. Sidewalks shall be provided along all sides of the development that abuts a public street.
B. The internal walkways shall be distinguished from driving surfaces through the use of design features such as: special pavers, bricks, or scored concrete or stamped asphalt to enhance pedestrian safety and the attractiveness of the walkways. Striping may be used for driveway crossings.
C. Continuous, safe, pedestrian walkways at least five (5) feet wide shall be provided from parking areas, transit stops, and adjacent public sidewalks to building entrances.
D. Pedestrian connections shall be provided between adjacent developments or land uses.
E. Internal pedestrian connections shall take into consideration connectivity to public right-of-way for facilitating access to existing or future transit.

10.4.3 Trash Collection Facilities

Trash collection and service areas/loading docks must be incorporated into the overall design of the development so as to minimize the visual and acoustic impacts of these functions from adjacent properties and public streets. Trash collection and service areas that can be viewed from public roads or adjoining residential or commercial properties shall provide a six (6) foot tall wall around the facility; trash areas shall have a durable opaque metal gate. These areas shall complement the principal building architecture to the extent possible.

10.4.4 Recreational Space

Recreation space of not less than 200 square feet of usable land for each unit shall be provided in multifamily residential developments. For purposes of this section, “Usable Open Space” shall be construed to mean parks, open space, and recreation amenities such as a clubhouse, swimming pool, or similar improvements.

10.4.5 Density

The density for residential developments in unzoned areas of the County shall not exceed twenty (20) dwelling units per acre.

ARTICLE 11 CLUSTER DEVELOPMENTS

11.1 Intent

This section is intended to serve as guidelines for the submittal of preliminary plans for subdivisions in zoned areas utilizing the Open Space options. The Planning Commission shall determine if the preliminary plan(s) is consistent with the purpose and intent of the Zoning Ordinance related to cluster development and open space and these guidelines:

A. Home sites are clustered to preserve open space for recreational, environmental, or ecological reasons;
B. The development preserves open space, tree cover, scenic vistas, natural drainageways, and outstanding natural topography, whenever possible; and
C. Within an existing subdivision, the proposed clustered lots should have the least impact on other properties within the same subdivision.
D. Allowing the flexibility of lot sizes within the zoned areas of the County.
E. Home sites may be clustered to protect sensitive areas, such as wetlands, historic sites/cemeteries, endangered species habitat, or prime agricultural land. In these cases, homeowners and the general public would not have access to these preserved areas. Limited access will be provided to cemeteries for maintenance and family visitation.

11.2 General Provisions

A. The Tree ordinance requirements may be met with trees located within the Open Space. These trees must be clearly identified and labeled as such. A Tree Protection Plan must be submitted and approved.
B. Water quality buffers can be located within the Open Space to meet stormwater management requirements. Permission must be obtained from Land Development Division for use and any alterations of those features.

11.3 Preliminary Plans

In addition to the requirements in Article 3, General Subdivision Requirements, the following information must be provided at the time of submittal for preliminary approval:

11.3.1 Density Table

The preliminary plan should include a table with the number of gross acres, permitted density per acre, required open space (total and breakdown by type), and total number of dwelling units.

Table 11.1 Sample Density Table

Cluster Development	***Example data***
Gross Acres	*10 acres*
Zoning / Permitted Density	*R-6 / 7.26 units per acre*
Number of Lots/Dwelling Units Allowed	*72*
Number of Lots/Dwelling Units Proposed	*60*
Option ____ Required Open Space	*Option _1_* *Required - 1.5 acres*

Developable Land (50% min)	*1.0 acres*
Undevelopable Land	*0.5 acres*

11.3.2 Open Space Delineation

All property designated for required open space shall be delineated on the preliminary plan. A breakdown of open space in floodplain and on steep slopes should be shown on the preliminary plan in total acres and percentages of gross acres. The Planning Commission shall determine the appropriateness of the dimensions of the required open space. The open space on the preliminary plan should have meaningful dimensions, proportions, and placement.

A. Only the required acreage to meet the Cluster Requirements shall be identified as "Open Space". All other areas that will be owned and maintained by the HOA shall be identified as Common Area.
B. The developable and undevelopable acreage of Open Space shall be shown on the preliminary plan; and proposed uses for these areas shall be shown on the plan.
C. Areas to be wholly preserved, such as wetlands, endangered species habitat, or cemeteries, shall be identified as "Preserved Area - No Access" on the plans. Limited access will be provided to cemeteries for maintenance and family visitation.

Areas designated for Open Space with standing timber, areas of 30% or greater slope, and other natural features should be shown on the preliminary plan.

11.4 Access to Open Space

The required open space must be directly accessible to the largest practical number of lots within the development. Non-adjoining lots must be provided with safe, convenient access to the open space. Each noncontiguous area designated for open space shall have a minimum of one primary access point from an internal subdivision road. Additional secondary access points may be included. Access points to the open space shall have the following restrictions:

A. The primary access point shall be twenty (20) feet in width.
B. Additional secondary access point(s) shall be not less than six (6) feet in width.
C. The primary and any secondary access points to the open space shall be shown as part of the open space and shall not be part of an individual lot nor shall it be an easement.

11.5 Ownership and Maintenance

All land dedicated as Open Space shall have land development restrictions. The easement shall run with the land, provide for protection in perpetuity, and be granted to the owning entity as noted above.

The owner and developer or subdivider shall select land dedicated for open space purposes and type of ownership. Type of ownership may include, but is not necessarily limited to, the following:

A. The County, subject to acceptance by the governing body;
B. Other public jurisdictions or agencies, subject to their acceptance;
C. Non-profit or quasi-public organizations committed to the protection and conservation of open space, subject to their acceptance;
D. Homeowners Association, or cooperative associations or organizations;
E. Shared, undivided interest by all property owners within the subdivision.

11.5.1 Maintenance of Open Space

The person(s) or entity identified above, as having the right to ownership or control over open space, shall be responsible for its continuing upkeep and proper maintenance.

11.6 Final Plats

For residential developments utilizing open space development options, when recording a Final Plat, in addition to the requirements in Article 3, the following apply:

A. The recorded required acreage for open space on each final plat must be proportional or greater to the total acreage being platted. Subsequent final plats must also meet the proportional requirements for the overall platted acreage.
B. The following information must be shown on the final plat at the time of submittal:

1. Density table, using the same format as on the preliminary plan, and shall include the proportional acreage being recorded. As shown in the exhibit below.

Table 11.2 Density Table Example

Cluster Development	***Entire Development***	***This Plat***	***Cumulative (to date)***
Zoning / Permitted Density	*R-6 / 7.26 units/acre*		
Gross Acres	*10 acres*	*4*	*7*
Number of Lots Allowed	*72*		
Number of Lots Proposed	*60*	*24*	*34*
Required Open Space Option ____ / (15%)	*1.5 acres* *Option 1 / (15%)*	*0.6 acres*	*1.05 acres*
Developable Land (50% min)	*1 acres*	*0.4 acres*	*0.525 acres*
Undevelopable Land	*0.5 acres*	*0.2 acres*	*0.3 acres*

2. Notations indicating the delineated open space, including metes and bounds, are to be shown on the Final Plat;

3. Open Space Easements
Prior to the recording of a subdivision final plat, an easement shall be placed on all lands and private waters used to satisfy the open space requirements of cluster development. The easement shall be solely for the purpose of ensuring the land remains undeveloped and shall not, in any way, imply the right of public access or any other right or duty not expressly set forth by the terms of the easement. The easement shall run with the land, provide for protection in perpetuity, and be granted to the County, subject to acceptance, a County-approved non-profit land trust, the Homeowners Association or other qualified organization approved by the County. The easement shall include a complete metes and bounds of the property being designated as open space.

4. Notes to be included on the Final Plat:

   a. This development has been approved by the Planning Commission as a Cluster Development and has provided certain acreage of open space.
   b. Open Space Easement. The removal of trees and natural vegetation is permitted in the development phases for the purpose of utility crossing easements, passive

recreational uses and drainage ways with the proper notations on the final plat. Neither the developer, property owners, or other subsequent contractors or builders shall be granted permission to remove or destroy any trees or natural vegetation from the open space area for passive recreational or any other purposes without the express written permission of the community board, or homeowners' association, or property owners, or trustees having jurisdiction over the implementation and enforcement of the subdivision covenants. If some part of the open space was designated to meet stormwater management requirements, permission must be obtained from the Land Development Division for any alteration of the designated open space. Normal maintenance and the removal of dead or fallen trees are permitted and recommended.

c. The open space for this development is protected by an easement that has been recorded at the Greenville County Register of Deeds Office (Instrument #) and as outlined in the Subdivision Covenants (Instrument #).

5. Subdivision Covenants
   The covenants for the subdivision shall include provisions for the protection of trees and other natural amenities within the property designated for open space. A copy of the covenants is to be provided prior to the recording of a final plat.

6. Access to open space shall be shown on the final plat in conjunction with the requirements of Article 3.

11.7 Existing Subdivisions

Cluster development is permitted in previously platted subdivisions if:

1. A phase of an existing subdivision has received preliminary approval, but site preparation work, including grading, has not begun; and
2. A phase of a subdivision is not completely developed and 100% of all the property owners in that phase agree to the cluster design on the remaining property.

ARTICLE 12 PROVISIONS FOR GROUP DEVELOPMENT

12.1 Application

Multi-Dwelling (Apartments, Townhomes, Condos), Group Commercial, Planned Residential, and Mixed-Use Developments may be created with or without fee simple lots. Group Developments allow review of these projects for overall design, vehicular and pedestrian connections, stormwater and other infrastructure, and overall appropriateness regardless of whether or not lots are created.

12.2 Review Process

When **new lots** are being created as part of an overall development, a Preliminary Plan shall be submitted to Subdivision Administration, following the requirements and process described in Article 3. Subdivision Administration shall be the lead agency in processing and approval. In addition, and concurrently, a Group Development Plan shall be submitted to Planning and Zoning as described below. Both the Preliminary Plan and Group Development Plan shall be taken together to Subdivision Advisory Committee for comment; the Group Development shall be approved by Subdivision Advisory Committee and Planning and Zoning. The Preliminary Plan shall be taken to the Planning Commission for review. Subdivision Administration shall sign off on approved Preliminary Plans once Planning and Zoning has notified them of their approval, after Planning Commission consideration.

For projects that are an overall development where **no new lots** are created, only a Group Development Plan is submitted to Planning and Zoning for approval by the Subdivision Advisory Committee. In this case, Planning and Zoning shall be the lead agency in processing and approval. Should lots be created at a later date, a Preliminary Plan will be required.

12.3 Group Development Plan Submittal Requirements

12.3.1 Fees

A. Fees
In either case, filing fees will be the same as outlined for Preliminary Subdivision Plan submittals.

12.3.2 Plan Elements

A. Plan Requirements
Provide the following information, overlaying the proposed Preliminary Plan at 50% opacity if applicable. If no Preliminary Plan is required, show all information at 100% thickness. Multiple sheets may be necessary to maintain legibility.

1. The plan must be drawn to a scale of not less than 100 feet to 1 inch by a registered engineer/surveyor of the State of South Carolina;
2. A vicinity map, title block, scale, north arrow, site size, and property line survey;
3. The location of any utility easements;
4. The land use for every part of the site and the number of acres devoted to each use, including any common areas;
5. The site's traffic circulation plan, including the location of curb cuts and points of ingress/egress, and also including the location and width of all streets, common drives, medians, entrances to parking areas, etc.;

6. The site's sign plan, which includes location of all free standing signage of the development;
7. The site's pedestrian circulation plan, including the location of all sidewalks, paths, trails, connectivity to public right-of-way for facilitating access to existing or future transit, and the dimensions thereof;
8. The screening for the site and landscape plan for proposed common areas; including the location, size, and type of plant material;
9. Applicable setbacks for all structures and signage;
10. The site's conceptual stormwater plan, including topographic contours (at 8ft lines or closer), stormwater retention/detention areas, and any other major stormwater features.
11. Statement describing ownership arrangement including any proposed owners association, horizontal property regime, or other group maintenance agreement.
12. Areas held in common ownership and maintenance shall be labeled "Undeveloped Area A, B, C, etc." and identified as to use and responsibility in plan notes.

12.4 Revisions to Approved Plans

Revisions that alter the basic concept and general characteristics of the development as to substantially affect the project functionality as approved may be required to resubmit for review as determined by the Subdivision or Planning and Zoning Divisions. If a Group Development was accompanied by a Preliminary Plan, then Subdivision Administration will determine the need for revision; if no lots were created, then Planning and Zoning will make the determination.

12.5 Design Standards

The following design standards apply to all Group Developments.

12.5.1 Roads and Driveways

Private roads, drives and driveways shall meet the County Land Development Regulations for thickness and drainage for private roads. If the roads are to be conveyed to Greenville County for maintenance, they shall be built in compliance with the public road standards as outlined in Article 5, Street Classification and Design Standards and Article 6, Roadway Construction Standards. Private roads may have parallel parking on them and must have ROW dedicated to an entity. Private roads or drives are required where lots do not have direct frontage on the road (i.e. the lot is surrounded by common area). Private driveways are the only road category that allows perpendicular parking.

12.5.2 Access

Approved access may consist of rights of access and cross parking agreements in which a lot is entitled as a portion of an approved Planned Residential Development, Group Commercial Development, Planned Commercial Center or Mixed-Use Development. Rights of access and cross parking agreements must be specifically outlined in legal documentation or in other recorded documents for the Property Owners Association or Horizontal Property Regime.

12.5.3 Minimum Lot Size

There is no minimum lot size for lots created as part of an approved Group Development.

12.5.4 Minimum Setbacks

No structure shall be erected within 25 feet from any external lot line; however, where land uses are the same as uses permitted in the adjoining properties outside the development, a lesser setback

that is consistent with the required setback of the adjoining properties may be permitted by the Planning and Zoning Division. Otherwise, no setbacks are required from property lines on the interior of the development.

ARTICLE 13 TRADITIONAL NEIGHBORHOOD DEVELOPMENT

13.1 Intent

The purpose of this section is to allow an option for development and redevelopment of land consistent with the design principles of traditional neighborhoods. A Traditional Neighborhood Development (TND) is compact and incorporates a system of relatively narrow, interconnected streets with sidewalks, bikeways, and transit that offer multiple routes for motorists, pedestrians, and bicyclists and provides for the connections of those streets to existing and future developments. These designs make possible reasonably high residential densities, a mixture of residential and commercial land uses, and a range of single and multifamily housing types.

13.2 Applicability

The Traditional Neighborhood Development standards ideally work best in new developments of over fifty (50) acres or more of land located within the urban core, or in redevelopment or infill development areas of the County and has access to one arterial road. A minimum of fifteen (15) acres is recommended. The area served must have adequate public water and wastewater disposal available.

13.3 Design Standards

To ensure consistency with the design principles of traditional neighborhoods, the guidelines provided in this document are to be adhered to as closely as possible in its totality.

In order to create a compact design, the following standards of density and dimensions will be included in any Traditional Neighborhood Development proposals.

13.3.1 Open Space

Open Space areas will be 20% of the gross acreage of the TND. At least 25% of the open space must include neighborhood parks, central squares, playgrounds and other recreational uses.

13.3.2 Residential Units

Traditional Neighborhood Development proposals in zoned areas must comply with the Greenville County Zoning Ordinance. In unzoned areas of the County, the number of residential dwelling units and the amount of non- residential development (excluding open spaces) shall be determined as follows:

In areas of the development devoted to Residential uses:

A. The number of single-family attached and detached units permitted shall be 7.26 dwelling units per net acre;
B. The number of multi-family units shall be 20 dwelling units per net acre.
C. Accessory dwelling units shall be permissible and calculated at a rate of 0.5 dwelling unit and be counted toward the total maximum density;
D. A variety of lot sizes should be provided that allow diverse housing choices;
E. Lot widths should create a relatively symmetrical street cross section that reinforces the public space of the street as a simple, unified public space;
F. Garages and accessory dwelling units may be placed on a single-family detached residential lot within the principal building or an accessory building provided that the accessory dwelling unit shall not exceed 800 square feet of living space.

13.3.3 Building Setbacks

A. Front

1. Community Center Area
   Structures in the above areas have no minimum setback and all buildings should abut the sidewalks in these areas;

2. Residential
   Single-family residences shall have a building setback in the front of 5-25 feet. Single-family attached residences and multifamily residences shall have a building setback in the front of 5-15 feet;

B. Rear

1. Residential
   If alleys are utilized, the principal building on lots devoted to single-family detached residences shall be setback no less than 30 feet from the rear lot line;

C. Side Setbacks
   Provision for zero lot-line single-family dwellings should be made, provided that a reciprocal access easement is recorded for both lots and townhouses or other attached dwellings, provided that all dwellings have pedestrian access to the rear yard through means other than the principal structure.

D. Garage or Accessory Dwelling Unit, Rear and Side
   Accessory Buildings should have a building setback of 5 feet.

13.3.4 Circulation Standards

The circulation system shall provide for different modes of transportation. The circulation system shall provide functional links within the Residential areas, Community Center area, and open space and shall be connected to existing and proposed external development. The circulation system shall provide adequate traffic capacity, provide connected pedestrian and bicycle routes (off street bicycle, and multi-use paths or bicycle lanes on the streets), limit access onto streets of lower traffic volume classification, and promote safe and efficient mobility through the Traditional Neighborhood Development.

A. Pedestrian Circulation
   Convenient pedestrian circulation systems that minimize pedestrian-motor vehicle conflicts shall be provided continuously throughout the Traditional Neighborhood Development. Where feasible, any existing pedestrian routes through the site shall be preserved and enhanced. Sidewalks are required on both sides of the street on major and minor collectors and on at least one side on most access roads. Sidewalks will be provided on the same side of and parallel to all on-street parking. All streets, except for alleys, shall be bordered by sidewalks in accordance with the specifications listed in Table 13.1. The following provisions also apply:

1. Residential Sidewalks
   Clear and well-lit sidewalks, depending on projected pedestrian traffic shall be provided and shall connect all main dwellings to the adjacent public sidewalk with an approved walkway.

2. Community Center and Commercial Sidewalks
   Clear and well-lit walkways shall connect building entrances to the adjacent public sidewalk and to associated parking areas. Such walkways shall be a minimum of 8 feet in width.

3. Disabled Accessibility
   Sidewalks shall comply with the applicable requirements of the Americans with Disabilities Act.

4. Crosswalks
   Intersections of sidewalks with streets shall be designed with clearly defined edges. Crosswalks shall be well lit and clearly marked with contrasting paving materials at the edges, stamped and painted asphalt, or with striping.

5. Alternative Multi-Use Paths/Trails
   These paths support multiple recreation opportunities. The multi-use path typically has a minimum of firmly packed crushed aggregate or other approved surface. See the FHWA guidelines for shared-use paths.

B. Bicycle Circulation
   Bicycle circulation shall be accommodated on streets and/or on dedicated bicycle paths. Where feasible, any existing bicycle routes through the site shall be preserved and enhanced. Facilities for bicycle travel may include off-street minimum 8 foot bicycle paths (generally shared with pedestrians and other non-motorized users) and separate, striped, 4 foot bicycle lanes on streets. If a bicycle lane is combined with a lane for parking, the combined width shall be 14 feet. The shoulder or gutter will not be used in calculating the 4 foot dimension.

C. Public Transit Access
   Where public transit service is available or planned, convenient access to transit stops shall be provided. Where transit shelters are provided, they shall be placed in highly visible locations that promote security through surveillance, and shall be well-lighted.

D. Motor Vehicle Circulation
   Motor vehicle circulation shall be designed to minimize conflicts with pedestrians and bicycles. Traffic calming features such as chicanes, curb extensions, traffic circles, and medians may be used to encourage slow traffic speeds (see Appendix C).

13.4 Street Development Standards

Streets will be designed as a public space containing sidewalks, trees, lighting and signs and shall provide both the movement of traffic and intermodal opportunities within the TND. Street networks shall be a series of interconnected publicly maintained streets to allow traffic to filter through a variety of routes rather than concentrating all traffic from a neighborhood onto a single major collector road. The primary objective of the street network is to facilitate the movement of traffic at a slower speed and to encourage pedestrian activity. Slower speeds are encouraged by use of on-street parking, narrower streets, smaller curb radii and placing buildings closer to the streets.

All streets, alleys and pedestrian pathways will connect to other streets within the neighborhood and connect to existing and projected through streets outside the development. Where practical, a continuous network of private alleys to the rear of lots within the TND will be provided. Alleys will terminate at the intersection of another street or at a parking area.

Street designs will accommodate the use of the streets by cars, bicyclists and pedestrians. Pavement widths, design speeds and the number of vehicle lanes should be minimized without compromising safety. The specific design of any given street must consider the building types which front on the street and the relationship of the street to the TND street network. All streets with a design speed of less than 35 mph will be posted in accordance with the Manual of Uniform Traffic Control Devices.

13.4.1 Street Layout

The traditional neighborhood development should maintain the existing street grid, where present, and restore any disrupted street grid where feasible. In addition:

13.4.2 Blocks

No block side will have more than 1000 feet of street frontage. Roads with ADT's less than 750 VPD block lengths are recommended to be less than 500 feet and with ADT's greater than 750 VPD and should have 800 feet between intersections. The traffic engineer may waive the block design standard in cases when the topographic situation warrants design changes.

13.4.3 Intersections

Intersections shall be at right angles whenever possible, but in no case less than 75 degrees. Low volume streets may form three-way intersections creating an inherent right-of-way assignment (the through street receives precedence), which significantly reduces accidents without the use of traffic controls. When a centerline offset occurs, the distance between the centerlines of the two intersection streets will not be less than 100 feet.

13.4.4 Corner Radii

The roadway edge at street intersections shall be rounded by a tangential arc with a maximum radius of 15 feet for local streets and 20 feet for intersections involving collector or arterial streets. The intersection of a local street and an access lane or alley shall be rounded by a tangential arc with a maximum radius of 10 feet.

13.4.5 Curb Cuts

Curb cuts for driveways to individual residential lots shall be prohibited along arterial streets. Curb cuts shall be limited to intersections with other streets or access drives to parking areas for commercial, civic or multifamily residential uses.

13.4.6 Bike Lanes

A bike lane is a minimum 4 foot wide lane dedicated for the use of bicycles, measured from the edge of the vehicular travel lane to the beginning of the gutter line. Bike lanes will be striped and marked according to AASHTO standards.

13.4.7 Traffic Calming

The use of traffic calming devices such as mid-block chokers or chicanes, neck downs, raised cross walks will be implemented with the TND or minor collector roads if the total length exceeds 800 feet.

13.4.8 Street Orientation

The orientation of streets should enhance the visual impact of common open spaces and prominent buildings and minimize street gradients. All streets shall terminate at other streets or at public land, except local streets may terminate in stub streets when such streets act as connections to future phases of the development.

Exhibit 13.1 Street Cross Section for Local Street Types.

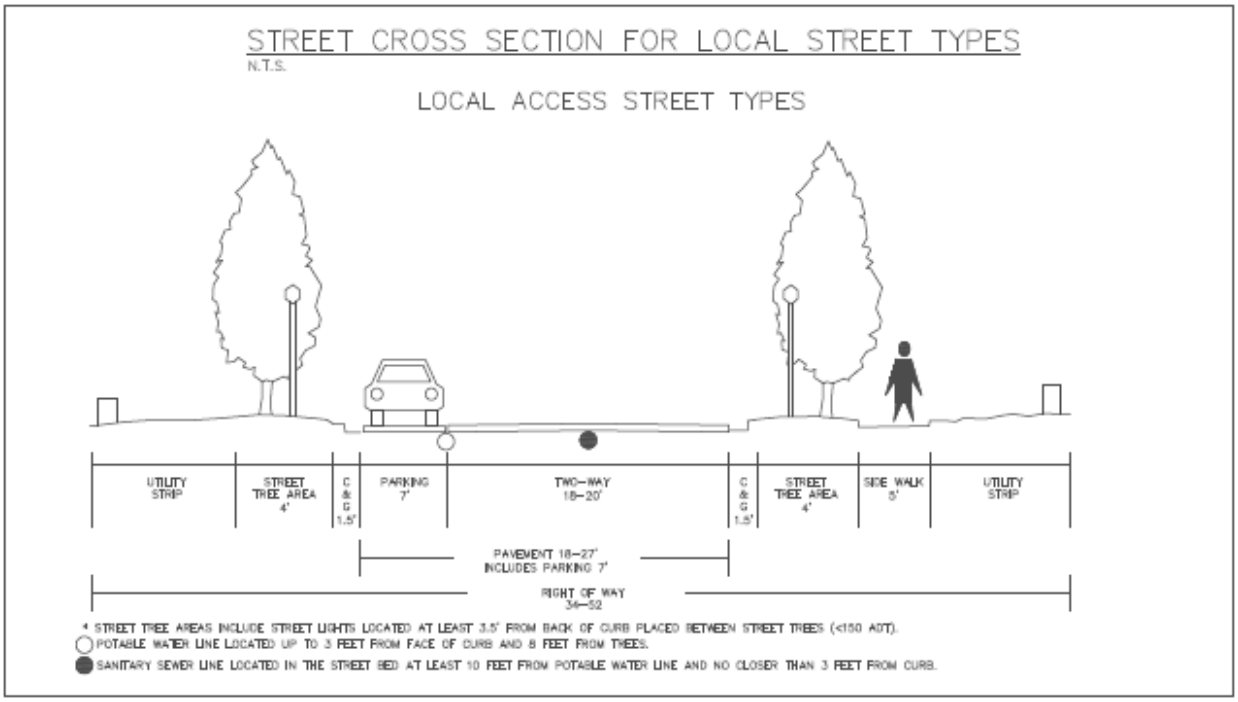

Exhibit 13.2 Street Cross Section for Sub-Collector and Collector Street Types

13.5 Parking Lots

13.5.1 Parking Requirements

Parking areas for shared or community use should be encouraged. In addition:

A. In the mixed-use area, any parking lot shall be located at the rear or side of a building. If located at the side, screening shall be provided.
B. A parking lot or garage may not be adjacent to or opposite a street intersection.
C. In the mixed-use area, a commercial use must provide one parking space for every 500 square feet of gross building area. See Zoning Ordinance for additional guidance.
D. Adjacent on-street parking may apply toward the minimum parking requirements.
E. In the mixed residential areas, parking may be provided on-site. One off-street parking space with unrestricted ingress and egress shall be provided for each secondary dwelling unit.
F. On-street parking is located within 300 feet of an entrance to a multi-family parcel.
G. Parallel Parking stalls will be a minimum of 7 feet by 20 feet.
H. Diagonal parking, at a 60 degree angle, shall have an 11 foot through lane.

13.5.2 Service access

Access for service vehicles should provide a direct route to service and loading dock areas, while avoiding movement through parking areas.

13.5.3 Paving

Reduction of impervious surfaces through the use of pervious pavement is strongly encouraged for areas such as remote parking lots and parking areas for periodic uses.

13.5.4 Access

Corner lots with frontage on arterial or major collector roads may only have access from the lower classified street.

13.6 Landscaping and Screening Standards

At a minimum, the Greenville County Tree ordinance standards must be met. However, overall composition and location of landscaping shall complement the scale of the development and its surroundings. In general, larger, well-placed contiguous planting areas shall be preferred to smaller, disconnected areas.

13.6.1 General Screening

Screening shall be at least 6 feet in height within two years of planting and no less than 4 feet in height at planting, unless otherwise specified. Required screening shall be at least 50 percent opaque throughout the year. Required screening shall be satisfied by one or some combination of: a decorative fence not less than 50 percent opaque behind a continuous landscaped area, a masonry wall, or a hedge.

13.6.2 Street Trees

A minimum of one deciduous canopy tree per 40 feet of street frontage, or fraction thereof, shall be required. Trees can be clustered and do not need to be evenly spaced. Trees should preferably be located between the sidewalk and the curb, within the landscaped area of a street, or in tree wells installed in pavement or concrete. If placement of street trees within the right-of-way will interfere with utility lines or service vehicle access, trees may be planted within the front yard setback

adjacent to the sidewalk. Street trees shall not be placed on top of drainage structures and shall be maintained by the Property Owners Association.

13.6.3 Parking Area Landscaping and Screening

All loading dock areas fronting public streets, and all parking and loading dock areas abutting residential districts or uses, shall provide:

A. A landscaped area at least 5 feet wide along the public street.
B. Screening under 2 feet in height at time of planting and/or over 6 feet (canopy) in height at time of planting.
C. One tree for each 25 linear feet of parking lot frontage.

13.6.4 Parking Area Interior Landscaping

The corners of parking lots, "islands," and all other areas not used for parking or vehicular circulation shall be landscaped. Vegetation can include turf grass, native grasses or other perennial flowering plants, vines, shrubs or trees. Such spaces may include architectural features such as benches, kiosks or bicycle parking. LID features to meet water quality standards can be included in these areas.

In large parking lots containing more than 200 spaces, an additional landscaped area of at least 300 square feet shall be provided for each 25 spaces or fraction thereof, containing one canopy tree. The remainder shall be covered with turf grass, native grasses or other perennial flowering plants, vines or shrubs.

13.7 Stormwater Management

The design and development of the traditional neighborhood development shall meet the current Stormwater Management Ordinance requirements.

13.8 Utilities

All utilities located within the public road right-of-way shall be underground.

13.8.1 Easements

Where sewer mains are located outside the public right-of-way, an easement will be created in favor of the utility provider in accordance with the standard utility easement agreement in effect by that agency.

13.8.2 Water main placement

All water mains will have a minimum bury of three feet, unless a reduction in cover is approved by the local water utility provider and ductile iron pipe is provided. All mains will have a minimum 8 foot horizontal separation from trees. Where mains are located within the paved street, they will be a minimum of 3 feet from the face of the curb, will be located out of the travel lane wherever on-street parking is provided and will have a minimum of a ten-foot horizontal separation from sanitary sewer lines, unless a reduction is approved by SCDHEC. All valves within the paved street will be accessible, will not be located within parking zones, will be located in alignment with the curb return radius at intersections, where possible and will be a minimum of 8 feet from any tree.

13.8.3 Sewer placement

Sanitary sewer lines will be within the paved street section to the maximum extent possible, while maintaining a 10 foot horizontal separation from water mains. Sanitary sewer manholes will be no closer than 3 feet to the curb and gutter, and under no circumstances will ring and cover be placed in the gutter.

13.8.4 Fire hydrants

The final placement of all fire hydrants will be subject to approval by the water provider and fire marshal.

13.9 Ownership and Maintenance of Public Use lots, Greenways and Civic Use Areas

Land designated as public use lots, greenways and civic use areas may not be separately sold, subdivided or developed. These areas will be maintained so that their use and enjoyment as open space are not diminished or destroyed. Open space areas and civic buildings may be owned, preserved and maintained by the following mechanism or combination thereof:

A. Dedication of and acceptance by the governing authority
B. Common ownership by a property owner's association (POA) which assumes full responsibility for its maintenance. Provisions for long term maintenance must be defined and identify a source of funding to support future required maintenance and upkeep activities.
C. Deed restricted which will prevent development and/or subsequent subdivision of the open space land or use of civic building for other than uses permitted under the approved plan and provides the maintenance responsibility of the open space or civic building.
   The private owners must ensure that maintenance is completed in compliance with the restrictive covenants and any maintenance agreements.
D. The private owners shall take reasonable care to ensure that the open spaces do not contain conditions that are unsafe or adversely affect the environment. In the event that any private owners of open space fails to maintain the same, after thirty (30) days of the final written notice, may correct a violation of the maintenance requirement by performing or having performed the necessary work to place the open space in safe condition. The County may assess the private owners for the cost of repair work, including any associated plans, permits, oversight, inspection, and maintenance reporting, which shall become a lien on the property,, and which lien may be placed on the ad valorum tax bill for such property and collected in the ordinary manner of such taxes.

Table 13.1 TND Design Standards

Street type	Minimum pavement width (ft)†			Min. row width (ft)	Max. grade (%)	Max. volume (trips/day)	Sidewalk required	Curb & gutter (ft)	Curb radius (ft)	Bicycle lane	Planter strip (ft)
	No on-street parking	On-street parking (1 side)	On-street parking (both sides)								
Alley (2w)	16	N/A	N/A	20	8	N/A	None	2 (ribbon 1 ft)*	10	N/A	None
Alley (1w)	12	N/A	N/A	18	8	N/A	None	2 (ribbon 1 ft)*	10	N/A	None
Access (w/o alley)	18	N/A	N/A	36	11	<150	1 side	Roll curb	15	None	4
Access (w/o alley)	N/A	27	N/A	47-52	11	>150-<250	5 (one side)	1.5 (standard) if parking Roll curb if no parking	15	None	4
Access (w/alley)	N/A	25	N/A	45-50	11	>150-<250	5 (one side)	1.5 (standard) if parking Roll curb if no parking	20	None	4
Sub-collector	N/A	29	36	66-77	10	250-750	5 (both sides)	1.5 (standard)	20	4 (no parking)†† 6 (combined w/parking)	6
Mixed use local	N/A	28	34	76-82	10	≤1000	5/8 (both sides)	2 (standard)	20	6 (combined w/parking)††	6
Residential Collector	N/A	31	38	73-80	10	750-1250	5 (both sides)	2 (standard)	20	6 (combined w/parking)††	6
Commercial Collector**	N/A	N/A	38-50***	82-88	8	≤2000	8 (both sides)	2 (standard)	20	6 (combined w/parking)††	6

*Alleys shall be constructed with an inverted crown

**In cases where the road belongs to the state, standards will be determined by SCDOT

***If center island/median is included

† Pavement width does not include the curb

†† If alternative multi-use path or bike paths are provided, bicycle lanes will not be required

Table 13.2 Street Access within TND by Lot Type

Street Type	Detached Home Lot	Attached Home Lot	Civic Lot	Retail/Office Lot	Employment Lot	Public Use Lot
Alley	YES	YES	NO	NO	NO	NO
Access	YES	YES	YES	NO	NO	YES
Subcollector	YES	YES	YES	NO	NO	YES
Mixed use local	YES	YES	YES	YES	YES	YES
Residential Collector	YES	YES	YES	NO	NO	YES
Commercial Collector	NO	YES	YES	YES	YES	YES

All private and public lots will be accessable by a public or private street.

ARTICLE 14 MANUFACTURED HOUSING

14.1 Single Site Location and Development Standards

14.1.1 General Standards

Manufactured multi-section and single-section homes may be located on an individual lot or within a subdivision in Greenville County if the following requirements are met.

14.1.2 Certification

Any new homes locating in Greenville County must bear a label certifying or documents certifying that it is constructed in compliance with the National Manufactured Housing Construction and Safety Standards Act. Homes currently located in Greenville County without the certification may not be relocated to another site until it has been inspected by the Code Compliance Division to assure the structure meets State Housing Regulations for used manufactured homes. All site built components not addressed in this section (examples: porches, decks, additions) are required to meet the most recent edition of the adopted residential building code and applicable appendices adopted by the County of Greenville.

14.1.3 Roofing

The pitch of the roof for a multi-section home must have a minimum vertical rise of two and one-half (2.5) feet for every 12 feet of horizontal run, and the roof must be finished with a type of shingle that is commonly used in conventional residential site-built dwellings. The roof for a single-section home may be metal or shingle.

14.1.4 Siding

The exterior siding consists of wood, hardboard, stucco, vinyl, aluminum lap siding or metal. Manufactured homes located within a subdivision shall have exterior siding comparable in composition, appearance and durability to the exterior siding commonly used in conventional residential site-built construction.

14.1.5 Orientation

The manufactured home shall be located so that the main entry door faces the street on which the manufactured home is located. An all-weather walkway shall be installed from the street, driveway or sidewalk adjoining neighboring lots to the front door. The manufactured home must be oriented on the lot so that its long axis is parallel with the street. However, a perpendicular or diagonal placement may be permitted if one or more of the following conditions are met:

A. The manufactured home is being installed in a new subdivision (approved after the adoption of this Ordinance) where other multi-sectional homes are being located;
B. This orientation is consistent with other residential properties on the same street within 500 feet or;
C. The manufactured home has been specifically designed and built by the manufacturer with the door on the short end.

14.1.6 Installation

Should the manufacturer's instructions not be available, the following specifications shall be used.

A. Footings
The base of all piers shall be comprised of a solid masonry block at least 3,000 psi strength: piers less than 80" in height shall use blocks, 16" x 16" x 4" in size: piers more than 80" in height shall use blocks, 24" x 24" x 6" in size.

B. Piers

1. Piers less than 36" in height: 8" x 16" concrete block with open cells vertical.
2. The piers shall be covered with a 2" x 8" x 16" pressure treated wood or 4" masonry cap.
3. All piers between 36" and 80" in height and all corner piers must be double blocked (8" x 16" blocked inter-locked) and capped with a 4" x 16" x 16" pressure treated pier cap or a 4" masonry cap.
4. Piers over 80" in height require engineering.

C. Skirting
Skirting or a curtain wall, unpierced except for required ventilation and access door, must be installed and maintained so that it encloses the area under all manufactured homes and any additions, to ground level. Porches and decks may be enclosed with wood lattice or similar materials. The foundation skirting or curtain wall may be of brick, masonry, or vinyl or similar materials designed and manufactured for permanent outdoor installation. Material used for skirting should be erected so as not to create a fire hazard and maintained in a good state of repair.

1. Ventilation
The under-floor space between the bottom of the floor joists and the earth under any building (except space occupied by a basement or cellar) shall be provided with ventilation openings through foundation walls or exterior walls. The minimum net area of ventilation openings shall not be less than 1 square foot for each 150 square feet ($0.67m^2$ for each $100m^2$) of under-floor space area. One such ventilating opening shall be within 3 feet (914 mm) of each corner of said building.

2. Access
An access opening 18 inches by 24 inches (457 mm by 610 mm) shall be provided to the under-floor space. See Section M1305.1.4 for access requirements where mechanical equipment is located under floors.

D. Anchoring
Each manufactured multi-section home shall be anchored according to the HUD regulations of the National Manufactured Housing Construction and Safety Standards Act or the Manufacturer's Installation Manual.

Should manufacturer's instructions not be available, this table shall be used.

Table 14.1 Minimum Anchoring Requirements

(A) LENGTH OF HOME (FT.)	(B) NO. OF VERTICAL TIES	(C) NO. OF DIAGONAL TIES/PER SIDE	(D) MIN. NUMBER OF ANCHORS
Up to 40	2	4	8
40 to 46	2	4	8
46 to 49	2	5	10
49 to 54	3	5	10
54 to 58	3	5	10
58 to 64	3	6	12
64 to 70	3	6	12
70 to 73	3	7	14
73 to 84	4	7	14
Multi-section manufactured homes require only the diagonal ties specified in Column C.			

E. Removal of Transport Equipment
The tongue, axles, transporting lights, and towing apparatus must be removed from all manufactured homes after placement of a home on the lot and before occupancy.

F. Steps/Landings
Permanent landing and steps with handrails are required to each outside doorway which lead to the ground level and meet the following code requirements. Steps shall lead to the ground level and meet the following code requirements:

1. A minimum 4 ft. x 4 ft. landing shall be required outside of each exit door.
2. The landing shall not be more than 8 inches below the threshold.
3. Steps shall be 7 3/4 inches maximum in height. Treads shall be a minimum of 10 inches wide.
4. All wood components in contact with the ground must be treated and approved for ground contact.
5. Handrails having minimum and maximum heights of 34 inches and 38 inches (864 mm and 965mm), respectively, measured vertically from the nosing of the treads, shall be provided on at least one side of stairways. All required handrails shall be continuous the full length of the stairs with two or more risers from a point directly above the top riser of a flight to a point directly above the lowest riser of the flight. Ends shall be returned or shall terminate in newel posts or safety terminals. Handrails adjacent to a wall shall have a space of not less than 1.5 inches (38mm) between the wall and the handrail.

   The handgrip portion of handrails shall have a circular cross section of 1 ¼ inches (32 mm) minimum to 2 5/8 inches (67 mm) maximum. Other handrail shapes that provide an equivalent grasping surface are permissible. Edges shall have a minimum radius of 1/8 inch (3.2 mm).

6. Guardrails
   Porches, balconies or raised floor surfaces located more than 30 inches (762 mm) above the floor or grade below shall have guards not less than 36 inches (914 mm) in height. Open sides of stairs with a total rise of more than 30 inches (762 mm) above the floor or grade below shall have guards not less than 34 inches (864 mm) in height measured vertically from the nosing of the treads.

   Required guards on open sides of stairways, raised floor areas, balconies and porches shall have intermediate rails or ornamental closures that do not allow passage of a sphere 4 inches (102 mm) in diameter. Required guards shall not be constructed with horizontal rails or other ornamental pattern that results in a ladder effect.

14.1.7 Real Property

When the owner of a manufactured home is also the named owner of the real property upon which the home is situated, the homeowner shall be required to register the home on the tax rolls as part of the real property. For homes meeting this requirement, a unified, single tax bill for home and land will be generated, and the home shall be taxed accordingly.

14.1.8 Drives

An all-weather surface drive from the adjacent public road to the manufactured home is required.

14.1.9 Inspections

Each manufactured home approved for placement on a parcel and the parcel on which the home is to be located shall be subject to the following inspections prior to occupancy:

A. A Site Inspection prior to the manufactured home being moved to the site to ensure setback requirements are met.
B. A Final Inspection prior to occupancy of the manufactured home to ensure that all requirements within this section are met.
C. Manufactured homes shall not be occupied until a Certificate of Final Inspection has been issued.
D. The Code Compliance Division may allow occupancy and grant a 30-day extension to complete the foundation curtain wall if it is masonry.

14.2 Park Site Development Standards

14.2.1 Intent

The manufactured home park site development standards are established to encourage high quality manufactured home parks within Greenville County.

14.2.2 Site Plan Approval

Prior to construction of a new manufactured home park or enlargement of an existing manufactured home park at the time of adoption of this Ordinance, a development plan must be submitted and approved by the Subdivision Administrator in accordance with the submittal schedule and fees for Preliminary Subdivision Plans and shall be reviewed by the Subdivision Advisory Committee. The Planning Division must approve the proposed development for conformance with all applicable regulations prior to submitting to the Land Development Division for a land disturbance permit.

14.2.3 Site Plan Requirements

The plan shall be drawn by a registered engineer/surveyor of the state of South Carolina to scale of not less than 100 feet to 1 inch and shall contain the following information:

A. The location of the proposed park.
B. The location and dimensions of streets, rights of way, drives and parking spaces.
C. The location and size of manufactured home sites.
D. The location and size of service buildings and recreation areas.
E. The location and type of screening, fences, or hedges.
F. The names and addresses of developers. Any manufactured home, service building, or recreation area located in any manufactured home park shall be placed in accordance with an approved development plan.
G. Existing and finished contours at intervals not more than 2 feet.
H. The location of fire hydrants if applicable.
I. Storage areas.
J. Dumpsters locations
K. Delineation of 1% area of Special Flood Hazard.

14.2.4 Design Standards

The following standards shall apply to the manufactured home park and individual units within the park. Except for items specifically addressed in this section, each manufactured home must also meet the requirements outlined in the "Manufactured Housing Site Location and Development Standards" section of this ordinance.

A. Setback
No structures shall be placed within 25 feet from any external lot line.

B. Off- Street Parking
Off-street vehicular parking shall be as follows: two spaces for each manufactured home. One space for each park site employee shall be provided at each service building or recreation area.

C. Access
No manufactured home shall have direct access to a public street or highway. All manufactured home sites shall have access to an interior drive having a paved surface not less than 20 feet in width with a 5 foot right of way on each side. Drives with parallel parking on one side shall have a paved surface of 28 feet with a 5 foot right of way on each side.

D. Screening
Screening must be provided along the side and rear exterior lot lines where any manufactured home park is adjacent to a residential use and/or district. Screening does not need to be provided along property lines where a manufactured home park is adjacent to another manufactured home park(s).

A six (6) foot wall, fence, evergreen screening plant material or any combination thereof with a combined minimum height of six (6) feet above grade shall be used for the purpose of screening. If evergreen plant material is used, it must be at least four (4) feet in height at the time of planting and capable of forming a continuous opaque screen at least six (6) feet in height within two (2) years.

E. Utility Requirements
Within the approved park, each manufactured home site in a manufactured home park shall be provided with approved water and sewer service which is connected to the municipal water and sewerage systems or other systems meeting the approval of DHEC.

F. Recreation Areas
Recreation space of not less than 200 square feet of usable land for each manufactured home site shall be provided in the manufactured home park. For purposes of this section, "Usable Open Space" shall be construed to mean parks, open space, and recreation amenities such as clubhouse, swimming pool, or similar improvements. Additionally, a play area shall be provided of no less than 400 square feet.

G. Operating Requirements
The operator of each manufactured home park shall comply with all DHEC rules and regulations governing the sanitation and operation of manufactured home parks.

H. Garbage Disposal
At least one common dumpster for the manufactured home park is required. The dumpster shall be screened and be located no closer than twenty-five (25) feet to any residential use and/or zoned property.

14.2.5 Dead-End Roads

Closed ends of dead-end roads shall be provided with a cul-de-sac paved to a minimum of a 35 foot radius.

14.2.6 Street Lighting

All streets within the park shall be lighted at night. The lighting system shall be in accordance with standards recognized by the local power utility and the National Electric Codes.

14.2.7 Storage Area

On each manufactured home site, a space shall be designated for a storage building if provided. Storage buildings will only be permitted in locations designated on the approved manufactured home park plans.

14.2.8 Drainage Plan

Stormwater Management and Sedimentation and Erosion Control Plans shall be submitted to the Land Development Division for approval.

14.2.9 Flood Damage Protection

Review of the proposed Development shall be conducted by the Greenville County Floodplain Administrator for compliance with the Flood Damage Protection Ordinance.

14.2.10 Street Names

Permanent street names for each road within the development shall be submitted and reviewed by the E911 Addressing Department for approval.

14.2.11 Nonconforming Manufactured Home Parks

Manufactured home parks which were lawfully in existence and operating at the time of adoption of this ordinance and which do not conform to requirements set forth in this Article shall be considered nonconforming.

A. Nonconforming parks may only be expanded if in accordance with approved plans meeting the requirements of this ordinance and applicable zoning requirements.
B. The number of units in a nonconforming park shall not exceed the maximum approved units for the manufactured home park.
C. Units in a nonconforming park may be replaced provided that homes encroaching into the setback not be located any closer to the property line than the prior unit. In no case shall a unit be placed closer than five (5) feet from a property line.

If at any time a nonconforming manufactured home park in the unzoned areas of Greenville County is reduced to one (1) unit for a period exceeding six (6) months, the property shall be considered conforming and the park shall not be reestablished unless it conforms to all requirements in this Article.

ARTICLE 15 RV PARKS

15.1 General Standards

A single recreational vehicle may be located on an individual lot or more than one shall be located within a recreational vehicle park in Greenville County with the following requirements:

15.2 Parking and Storage of Vehicles

Not more than one (1) recreational vehicle shall be permitted to be parked on a lot. The vehicle shall not be parked in the front or side yard nor shall any such vehicle be parked or stored in front of the principal structure on a lot.

15.2.1 Hazard

Condition of soil, groundwater level, drainage and topography shall not create hazards to the property or the health or safety of the occupants. No portion of the site that is subject to flooding, subsidence, or erosion shall be used for any purpose that would expose persons or property to hazards; and

15.2.2 Maintenance

Recreational vehicles must be fully licensed and ready for highway use. A recreational vehicle is ready for highway use if it is on wheels or a jacking system.

15.3 Recreational Vehicle Park Site Development Standards

15.3.1 Intent

The recreational vehicle park site development standards are established to encourage high quality recreational vehicle parks within Greenville County that are safe for its occupants and sensitive to the environment.

15.3.2 Site Plan Approval

Prior to construction of a new recreational vehicle park or enlargement of an existing recreational vehicle park at the time of adoption of this Ordinance, a development plan must be submitted and approved by the Subdivision Administrator in accordance with the schedule for Preliminary Subdivision Plans and shall be reviewed by the Subdivision Advisory Committee. The Planning Division must approve the proposed development for conformance with all applicable regulations prior to submitting to the Land Development Division for a land disturbance permit. Any recreational vehicle, service building, or recreation area located in any recreational vehicle park shall be placed in accordance with an approved development plan.

15.3.3 Site Plan Requirements

The plan shall be designed by a registered engineer/surveyor/landscape architect of the state of South Carolina to scale of not less than 100 feet to 1 inch and shall contain the following information:

A. The location of the proposed park.
B. The location and dimensions of streets, rights of way, drives and parking spaces.
C. The location and size of recreational vehicle sites.
D. The location and size of service buildings and recreation areas.
E. The location and type of screening, fences, or hedges.

F. The names and addresses of developers.
G. Existing and finished contours at intervals not more than 2 feet.
H. The location of fire hydrants if applicable.
I. Storage areas.
J. Dumpsters if applicable.
K. Delineation of 1% area of Special Flood Hazard.
L. Utilities (sewer, water, electric, etc.) and a note on how they are procured/offered to visitors

15.4 Design Standards

15.4.1 Amenities

Uses permitted within a recreational vehicle park shall include: recreational vehicle sites, recreation facilities, common buildings and facilities (laundry, dining, parking, etc.), and management offices (which may include living quarters for the operator or manager of the park).

15.4.2 Minimum Space Size

A minimum net space of six hundred ninety (690) square feet is required for each RV space. A distance of at least ten (10) feet shall be maintained between trailers and/or structures. Any accessory structures or attachments shall, for the purpose of this requirement, be considered a part of the trailer or recreational vehicle;

15.4.3 Utility and Security Connection

Each travel trailer or recreational vehicle area shall be attached to the site only by quick disconnect type utilities and security devices, and has no permanently attached additions. These trailers or vehicles shall be connected to an approved water supply system that provides an accessible, adequate, safe, and potable supply of water. An adequate and safe sewer system, approved by DHEC, shall be provided in all travel trailer/ recreational vehicle parking areas;

15.4.4 Operating Requirements

The operator of each recreational vehicle park shall comply with all DHEC rules and regulations governing the sanitation and operation of recreational vehicle parks and amenities.

15.4.5 Hazards

Condition of soil, groundwater level, drainage and topography shall not create hazards to the property or the health or safety of the occupants. No portion of the site that is subject to flooding, subsidence, or erosion shall be used for any purpose that would expose persons or property to hazards;

15.4.6 Maintenance

Recreational vehicles must be fully licensed and ready for highway use. A recreational vehicle is ready for highway use if it is on wheels or a jacking system; and,

15.4.7 Parking/Maneuverability

Adequate off-street parking and maneuvering space shall be provided on site. The use of any public road, sidewalk, or right-of-way for the purpose of parking or maneuvering vehicles is prohibited.

ARTICLE 16 AREA SPECIFIC DESIGN GUIDELINES

16.1 Scuffletown Rural Conservation District Site Plan Review

16.1.1 Intent

This section is intended to serve as guidelines for the review of Major Subdivisions within the Scuffletown Rural Conservation District as identified in the Scuffletown Area plan and shown on the Official Zoning Map and in this Section.

16.1.2 Pre-Application Review

A preliminary application review with the Planning and Zoning Department is encouraged prior to submittal of a Preliminary Subdivision Plan. The review session is intended to familiarize the applicant with the approval process within the Scuffletown Rural Conservation District and to provide for an initial review of the development proposal and the basic development concepts prior to proceeding with the submittal of a more detailed preliminary subdivision plan. The pre-application review is not required and applicants may choose to by-pass this step and proceed directly to the preliminary plan. The following information shall be provided at the time of the pre-application review meeting.

A. A boundary survey with vicinity map, title block, scale, and north arrow;
B. Total number of acres of overall site;
C. Location and type of existing buildings;
D. Location and acreage of development areas, size and number of proposed lots;
E. Location and acreage of open space and buffers;
F. The number and size of lots;
G. Primary traffic circulation pattern, including external and internal points of ingress and egress;
H. Land cover type (i.e. wooded, pasture, wetland, etc.) indicating the wood line or boundary line between wooded and non-wooded areas of the site;
I. Any natural, historic and cultural features;
J. Topographic contour lines at 4-foot intervals;
K. Location of watercourses, live streams, marshes, 100-year floodplain, floodways, wooded areas, water impoundments, and other natural or hydrological features;
L. Any such information and descriptions as may be deemed reasonably appropriate for review.

16.1.3 Preliminary Subdivision Plan Approval

In addition to the requirements in Article 3, General Subdivision Standards, the following information must be provided at the time of submittal for preliminary approval.

A. Density Table
The preliminary plat should include a density table with the number of gross acres, permitted density per acre, required open space (total and breakdown by type), and total number of dwelling units.

B. Open space delineation
All property designated for open space shall be delineated on the preliminary plat. A breakdown of open space in floodplain and on steep slopes should be shown on the preliminary plat in total acres and percentages of gross acres. The Planning Commission shall determine the appropriateness of the dimensions of the required open space. The open

space on the preliminary plat should have meaningful dimensions, proportions, and placement.

C. Areas with standing timber, areas of 30% or greater slope, and other natural features should be shown on the preliminary plat.

D. Required buffer yards should be shown on the preliminary plat.

E. Access to open space
All open space shall have a minimum of one primary access point from an internal subdivision road. Additional secondary access points may be included.

Access points to the open space shall have the following restrictions:

1. The primary access point shall be twenty (20) feet in width.
2. Additional secondary access point(s) shall be not less than six (6) feet in width.
3. The primary and any secondary access points to the open space shall be shown as part of the open space and shall not be part of an individual lot nor shall it be an easement.

16.1.4 Final Subdivision Plats

In addition to the requirements in Article 3, the following information must be provided with and noted on the final plat at the time of submittal:

A. Density Table
Using the same format as on the preliminary plan, the density table shall include the total required open space and the required proportional open space acreage being recorded.

B. Notations indicating the delineated open space, including metes and bounds, are to be shown on the Final Plat;

C. Open Space Easements
Prior to the recording of a subdivision final plat, an easement shall be placed on all lands and private waters used to satisfy the open space requirements. The easement shall include a complete metes and bounds of the property being designated as open space.

D. Subdivision Covenants
The covenants for the subdivision shall restrict further development and include provisions for the protection of trees and other natural amenities within the property designated for Open Space. A copy of the covenants is to be provided prior to the recording of a final plat.

E. Access to open space shall be shown on the final plat.

F. Stub Streets
When a stub street is provided a notation shall be made on the final subdivision plat that states that the land outside the street right-of -way shall revert to the abutting property owners.

G. Notes to be included on the Final Plat:

1. This development has been approved by the Planning Commission as a Conservation Subdivision and has provided certain acreage of open space.
2. Open Space Easement. The removal of trees and natural vegetation is permitted in the development phases for the purpose of utility crossing easements, passive recreational uses and drainage ways with the proper notations on the final plat. Neither the developer, property owners, or other subsequent contractors or builders shall be granted

permission to remove or destroy any trees or natural vegetation from the open space area for passive recreational or any other purposes without the express written permission of the community board, or homeowners' association, or property owners, or trustees having jurisdiction over the implementation and enforcement of the subdivision covenants. If some part of the Open Space was designated to meet stormwater management requirements, permission must be obtained from the Land Development Division for any alteration of the designated Open Space. Normal maintenance and the removal of dead or fallen trees are permitted and recommended.

3. The Open Space for this development is protected by an easement that has been recorded at the Greenville County Register of Deeds Office (Instrument #) and as outlined in the Subdivision Covenants (Instrument #).

ARTICLE 17 STORMWATER MANAGEMENT

17.1 Areas Subject to Flooding

Subdivisions must comply with the provisions set forth in the County's most currently adopted Flood Damage Prevention Ordinance.

17.2 Stormwater Design Manual

All storm drainage design for subdivisions shall comply with the Greenville County Stormwater Management Design Manual (SMDM), latest addition.

Greenville County has established requirements and procedures to control the potential adverse effects of increased stormwater runoff associated with future development. County of Greenville is also required by federal law to obtain a National Pollutant Discharge Elimination System permit from the S. C. Department of Health and Environmental Control (DHEC) for stormwater discharges from the Greenville County Stormwater system. The NPDES permit requires the county to impose controls to reduce the discharge of pollutants in stormwater to maximum extent practical using management practices, control techniques and system design and engineering methods.

Thus all storm design for subdivisions shall comply with the Greenville County stormwater management design manual (SMDM), latest addition. The design manual can be viewed by accessing the Land Development Division's website under the Design Manual tab.

Please refer to Section 6.4.6 of this document for additional stormwater requirements.

17.3 Drainage System Design

17.3.1 Catch Basin Design

A. The following methods are acceptable submittals to demonstrate that the catch basin system's design meets the requirements of this section:
    1. Hydraflow Express Extension
    2. Hydraflow Storm Sewers Extensions
    3. Hand Calculations
    4. Tables 17.1 and 17.2 found below

B. Spread Limits
    1. The maximum allowable spread in the roadway shall be based on the 2-year design storm and shall be limited to no more than 8.5 feet of spread for grades from 1 to 3 percent, 8 feet of spread for grades from 3.1 to 6 percent, 7.5 feet of spread for grades from 6.1 to 10 percent, and 7 feet of spread for grades from 10.1 to 15 percent. Catch basins shall be located along the roadway at sufficient intervals to intercept flows before they exceed the maximum spread limit.
    2. Calculations for gutter spread are to be from computer software models if more than 20 joints in a pipe run. The formula to be used is the Manning's formula for gutter spread or USDOT Federal Highway Administration for gutter spread.

    Note: If gutter spread calculations are not by computer model, show all work to substantiate the calculations.

    Note: The following table is for determining the gutter spread (in feet) for a roadway with 3% cross slope and Miami rolled curb. Gutter flow is for the 2-year design storm.

Table 17.1 Gutter Spread

Road Grade	1%	2%	3%	4%	5%	6%	7%	8%	9%	10 %	11%	12 %	13 %	14 %	15 %
Gutter Flow															
0-2 CFS	6.7	5.9	5.5	5.2	5.0	4.8	4.7	4.5	4.4	4.3	4.3	4.2	4.0	3.9	3.9
3-4 CFS	8.4	7.4	6.8	6.5	6.2	6.0	5.8	5.7	5.6	5.5	5.4	5.3	5.2	5.1	5.0
5-6 CFS	9.7	8.6	8.0	7.5	7.2	7.0	6.8	6.6	6.5	6.3	6.2	6.1	6.0	6.0	5.9
7-8 CFS	---	9.6	8.9	8.4	8.1	7.8	7.6	7.4	7.2	7.1	7.0	6.8	6.7	6.6	6.5
9-10 CFS	---	---	9.6	9.1	8.8	8.5	8.2	8.0	7.9	7.7	7.6	7.4	7.3	7.2	7.1
11-12 CFS	---	---	---	9.8	9.4	9.1	8.8	8.6	8.4	8.2	8.1	8.0	7.8	7.7	7.6
13-14 CFS	---	---	---	---	9.9	9.6	9.3	9.1	8.9	8.7	8.6	8.4	8.3	8.2	8.1
15-16 CFS	---	---	---	---	---	---	---	---	---	9.2	9.0	8.9	8.7	8.6	8.5
17-18 CFS	---	---	---	---	---	---	---	---	---	---	---	---	9.1	9.0	8.9

At sag locations, the roadway shall have a minimum of 0.5% longitudinal slope within 50 feet of the level point in the sag. For large flows, flanking inlets are recommended on either side of the low point to prevent exceeding the spread limit.

C. Capture Efficiency

1. For the 10-year design storm, the capture efficiency for inlets on grade shall be no less than 90%, and the capture efficiency for inlets at sump locations shall be 100%.
2. For inlets on grade, the following table may be used for determining the required curb transition and apron length on the upstream side of the catch basin. For steep grades, large flows, or where the required transition is longer than desired, the cross slope of the roadway and depressed curb section may be increased to provide equivalent capture efficiency with a shorter transition.

   Note: The following table is for determining the minimum curb transition and apron length on the upstream side of the catch basin. The calculations are for a basin that is open on two sides (front and upstream side), is set back 24" from the curb, 30” from the curb if a type 9 catch basin is being used with sidewalks and has 6" of fall from the edge of pavement to the throat of the basin. The roadway cross slope used for this table is 2 percent.

Table 17.2 Minimum Curb Transition and Apron Length

Road Grade	1%	2%	3%	4%	5%	6%	7%	8%	9%	10 %	11%	12 %	13 %	14 %	15 %
Gutter Flow															
0-2 CFS	5'	5'	5'	5'	5'	6'	6'	7'	7'	7'	8'	8'	8'	8'	9'

3-4 CFS	5'	5'	6'	6'	7'	8'	8'	9'	9'	9'	10'	10'	11'	11'	12'
5-6 CFS	5'	6'	7'	8'	9'	10'	11'	11'	12'	12'	13'	13'	14'	14'	15'
7-8 CFS	6'	8'	9'	10'	11'	12'	13'	13'	14'	14'	15'	15'	16'	16'	17'
9-10 CFS	8'	9'	10'	12'	13'	14'	15'	15'	16'	16'	17'	17'	18'	19'	19'
11-12 CFS	9'	10'	12'	13'	14'	15'	16'	17'	18'	18'	19'	20'	20'	21'	22'
13-14 CFS	10'	12'	13'	15'	16'	17'	18'	19'	19'	20'	21'	22'	22'	23'	24'

3. At sag locations, the capacity of the catch basin shall be determined using the weir equation, unless precast boxes with special inlets are used, which may be designed with the orifice equation. Refer to Appendix F for details for on the Hood and Grate, Type 9, 16, 17 or 18 catch basins. The minimum curb transition/apron length on either side of the basin shall be 6' for catch basins open on three sides. Also ensure compliance with Section 8-77 #4 of the Stormwater Design Manual.
4. Catch basins shall not be allowed in the radius section at intersections, except where flows are very small, road grades are very flat, or the entire intersection is in a sag.
5. Manholes. Within a piped drainage system, an adequate number of manholes or inlets shall be constructed to provide for cleaning and maintenance of the stormwater system.

D. Weir Opening Height
For catch basins, the minimum allowable weir opening height shall be 4" and the maximum allowable weir opening height shall be 6”.

E. Offset Hood and Grate Inlets within the County’s right-of-way

Hood and grate inlets must meet the following conditions:

1. Hood and grate inlets will only be allowed where curb and gutter is proposed. Curb must transition to standard curb and gutter if rolled curb and gutter is proposed along street.
2. Proposed hood and grate inlets must meet all flow requirements of proposed location and drainage area. Multiple frame and grates in series are allowed for sag locations.
3. Frame and grate must be rated for heavy duty AASHTO H-20 loading.
4. Front of frame and grate must be offset from gutter flow line by a minimum of 12”. Boxes are not to extend under proposed asphalt.
5. Front edge of frame and grate will be set a minimum of 3” below grade of flow line or flume must have a 10 to 14% down slope from flow line.
6. Grate must be suitable for location; Vane grates are required for all grade applications, specialty grates that are ADA compliant or have openings designed to function better in areas where handicapped persons, bicycles and pedestrians may be present are required if pedestrian traffic is expected.
7. In locations along grade the minimum throat length shall be 6 feet along direction of flow and 3 feet on downhill side. In sag locations a minimum 6 foot throat will be required on each side.
8. Catch basin will be standard precast or 8” concrete brick.
9. Catch basin will have a minimum width of 36”.
10. All catch basins 4’ deep or deeper will require manhole steps 12” on center (Steps must conform to ASTM-C-478 or equivalent).

11. For square or rectangular boxes, the minimum clearance from side walls to outside edge of pipe is 6”. Round inlets will be required to be sized properly using standard methods taking into consideration size of pipes, number of pipes and the angle of entry.
12. All castings shall be American made to maintain standard sizes.

Exhibit 17.1 Hooded Grate Inlet

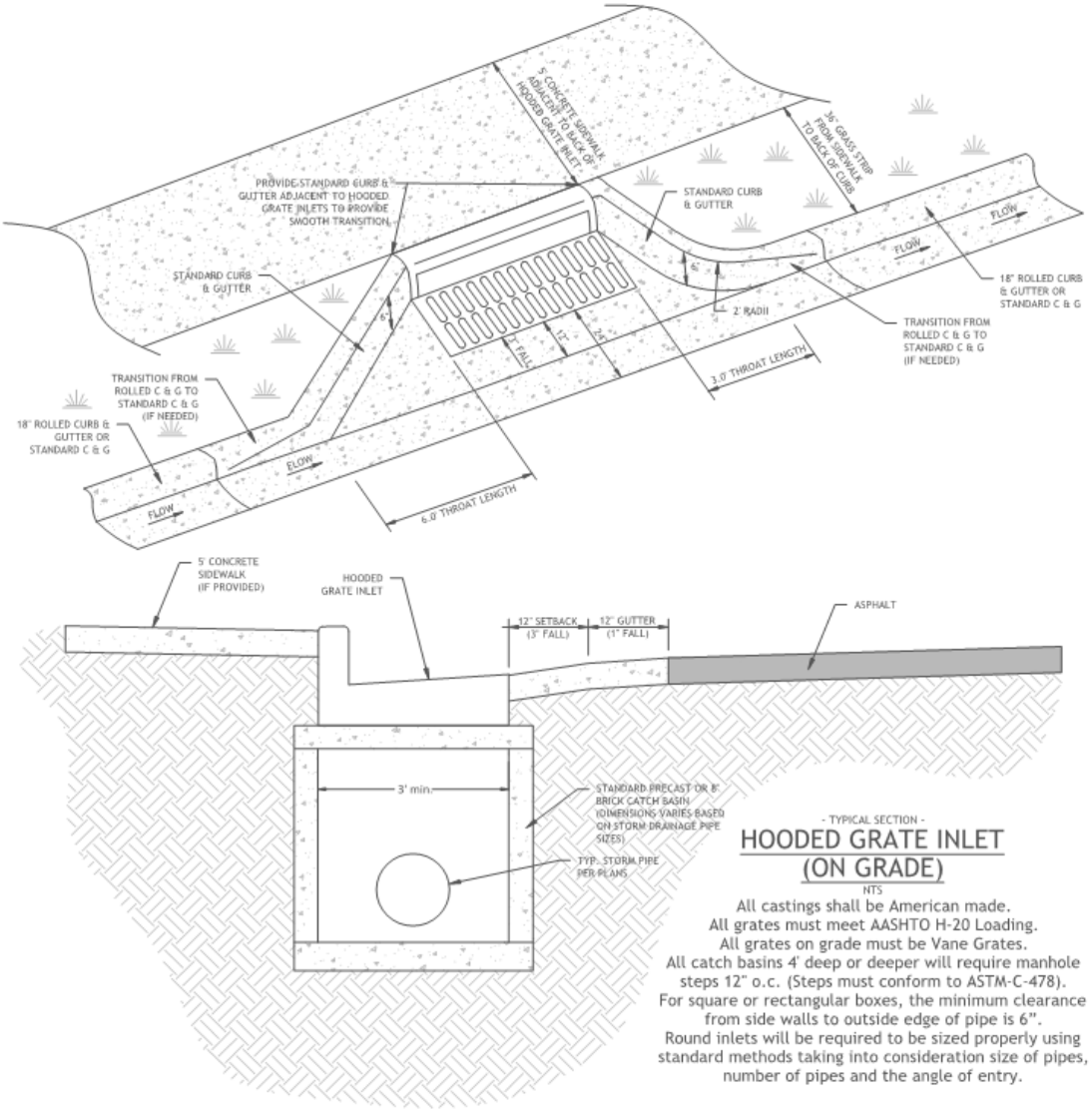

Exhibit 17.2 Sag Offset Inlet

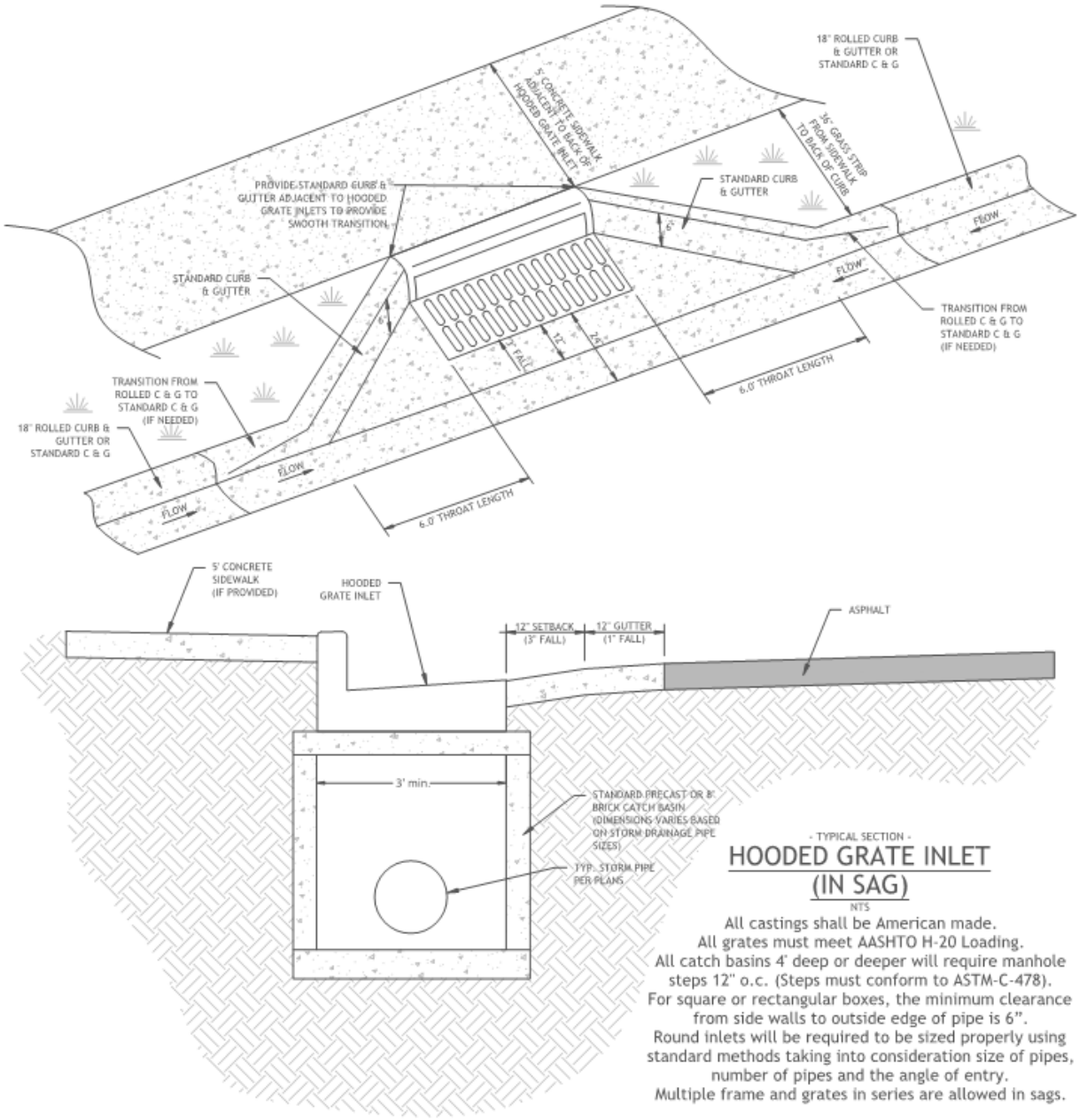

17.3.2 Pipe Design

A. The Manning equation shall be used for pipe design, assuming pipe flowing full.
B. The orifice equation shall be used to check the required headwater depths at all catch basins, junction boxes or pipe inlets along the system to predict and prevent surcharge conditions.
C. Alternatively, a computer model using the Standard Step method or other approved energy-based method may be used to compute the hydraulic profile.
D. For complex systems, the County Engineer or his/her authorized representative may require computation of the hydraulic profile.

E. As a minimum, the Engineer of Record shall submit the following to the County Engineer or his/her authorized representative for review of the proposed system:

   1. A drainage map consisting of a topographical map showing the proposed roadways and lots, drainage system with individual structures labeled, and all on-site and/or off-site drainage areas delineated and labeled showing acreages going to each inlet.
   2. Design calculations for piped systems and/or open channels.

F. No pipe less than 15" in diameter will be allowed, except for subsurface passive dewatering systems.
G. The pipe layout design should minimize running long sections of pipe diagonally under the pavement.

17.3.3 Outfall Structure Design

Stabilization shall be required at the outlet of all outfall pipes. On steep slopes, the last joint of pipe on a plain end outlet shall be a full 8' joint. A precast headwall or an approved reinforced concrete headwall is required for all pipe outfalls 36 inches and over. Where a drainage outfall is an appreciable distance above the bottom of a stream or ditch into which it empties, a means to reduce velocity by infiltration or dissipation is required.

17.3.4 Energy Dissipation

A. Energy dissipation measures shall be installed at all pipe outlets to prevent downstream channel erosion. Rip Rap aprons shall be designed in accordance to the guidelines in Section 8.4.8 of the SMDM, or other approved method.
B. Precast manhole sections may be adapted for use as energy dissipaters at outfalls. The energy dissipater shall be designed so as not to adversely affect the hydraulic capacity of the system.
C. Geotextile protection products may be used in high velocity conditions or where safeguarding of the material is needed. The County may require fabric on steep slopes and/or high velocity conditions.
D. Regetative Stormwater Conveyances (RSC) are a type of Best Management Practice (BMP) intended to simultaneously convey and treat stormwater runoff, often down a naturally occurring slope.

17.3.5 Roadway Culvert Design

A. The design of all roadway culverts shall comply with the requirements of Chapter 6 of the SMDM, or other approved methods.
B. The 25-year average return frequency storm shall be used for the design of all roadway culverts.
C. The permanent impoundment of water on the upstream side of the culvert (i.e., dams) is not permitted.

17.3.6 Open Channel Design

A. The design of all open channels shall comply with the requirements of Chapter 6 of the SMDM, or other approved methods.
B. Grassed channels shall meet the requirements in section 6.6.2 of the SMDM:
C. Where steep slopes, highly erodible soils, or other conditions prevent the proper establishment of grass by seeding & mulching, sod or manufactured erosion control mats may be necessary. Where grassing is required, the work will not be accepted until grass is well established as determined by the County Engineer or his/her authorized representative.

D. For all open channels, which cross or border on building lots, and where the 1% flow exceeds 50 CFS, the 100-year flood line shall be computed and the lowest floor elevations shall be set at least 4 foot above the base flood elevation.
E. Existing open channels within the subdivision which will carry increased flows as a result of development may require the installation of proactive stabilization measures to ensure the channel(s) can handle the increased flows without suffering erosion problems.
F. Channels and swales are required when more than two proposed lots concentrate flow to one conveyance point. The swale must meet the requirements outlined in sections 17.3.6 (B) and 6.1 (A) of these regulations.
G. Stormwater from offsite that flows through the proposed site must also comply with this section.

ARTICLE 18 PLANNED OFFICE DISTRICT (POD)

18.1 Intent

The review of Site Plans for properties that are zoned POD, Planned Office District is intended to make certain that any new development is aesthetically pleasing and harmonizes with any existing development(s) in the immediate area. The plans also should guarantee that the new development will not have a negative impact on the surrounding properties nor the infrastructure in the area.

18.2 Application Procedure

All applications for development in the Planned Office District shall be made to the Planning Department. The Planning Department staff shall provide the applicant or his/her designated representative with an adequate number of public notice signs to allow the applicant or his/her designated representative to properly post and maintain on the property a notice of plan review at least 15 days prior to the date of the Planning Commission meeting. The Planning Commission may authorize Planning Department Staff to review and approve Site Plans. At the discretion of Staff or in the case of an appeal of the decision of Planning Department Staff, the Planning Commission will act on the application. For applications presented to the Planning Commission for action, Planning Department staff shall submit a written review and recommendation of the application to the Planning Commission. The Planning Commission will evaluate staff's recommendation in its consideration of the application. The Planning Commission may impose additional or more restrictive requirements if it is determined that it is within the public interest.

Before the Planning Department staff makes a recommendation to the Planning Commission, it shall determine the following:

A. That the spirit of the zoning district shall not be violated.
B. That the proposed development will harmonize with existing developments.
C. That the proposed development will be a desirable addition to the physical pattern of the neighborhood.
D. That the design be such that additional traffic will not be a burden on existing streets.
E. That no adverse environmental impacts will be created by the proposed development.
F. That the visual appearance of the development will harmonize with the existing development.
G. That the architectural character blends with the surrounding area.

18.3 Site Plan Requirements

A site plan meeting the requirements of this section must be submitted to the Planning Department. In order to ensure proper and expeditious review, the site plan must meet the following criteria:

A. The site plan must be drawn to a scale of not less than 100 feet to 1 inch by a registered engineer/surveyor of the State of South Carolina;
B. A vicinity map, title block, scale, north arrow, site size, and property line survey;
C. The location of applicable setbacks and all existing and proposed easements;
D. The land use for every part of the site and the number of acres devoted to each use;
E. The site's traffic circulation plan, including the location of curb cuts and points of ingress/egress, and also including the location and width of all streets, drives, medians, service areas, dumpster pads, entrances to parking areas, etc.;

F. The site's parking plan, including all off-street parking, loading/unloading areas, and structures; including all parking spaces and their dimensions;
G. The site's sign plan, including location, size, colors, and materials of all exterior signage;
H. The site's lighting plan, including the location, height, and type of all exterior light fixtures;
I. The site's landscaping plan, including location, size, and type of proposed plant material, location of proposed fences, walls, retaining walls or berms, location of any tree protection areas, and location of significant stormwater features.
J. The location of all proposed nonresidential buildings or structures, their general exterior dimensions, and gross square footage;
K. The location of all proposed residential structures, their general exterior dimensions, the number of residential units by type, the number of bedrooms in each unit, and approximate square footage for single-family units;
L. The site's pedestrian circulation plan, including the location of all sidewalks, paths, trails, etc. and the dimensions thereof;
M. Specifications indicating the proposed treatment or improvements to all open space areas and the delineation of those areas proposed for specific types of developed recreational activities;
N. Architectural elevations of proposed buildings.
O. Perspective sketch indicating color and materials of all structures and screening.

18.4 Effect of Site Plan Approval

A Site Plan meeting the requirements of this section shall be reviewed and approved by the Planning Commission staff prior to the issuing of permits (i.e. grading, encroachment). All Site Plan review approvals are valid for two (2) years, where upon if no permit has been issued, a new Site Plan review will be required. Provided, however, approved Site Plans covered under this section are subject to the provisions of the County's Vested Rights Ordinance.

ARTICLE 19 NEIGHBORHOOD COMMERCIAL DISTRICT (NC)

19.1 Intent

The review of site plans for properties that are zoned NC, Neighborhood Commercial District is intended to make certain that any new development is aesthetically pleasing and harmonizes with any existing development(s) in the immediate area. The plans also should guarantee that the new development will not have a negative impact on the surrounding properties nor the infrastructure in the area.

19.2 Application Procedure

All applications for development in the Neighborhood Commercial District shall be made to the Planning Department. The Planning Department staff shall provide the applicant or his/her designated representative with an adequate number of public notice signs to allow the applicant or his/her designated representative to properly post and maintain on the property a notice of plan review at least 15 days prior to the date of the Planning Commission meeting. The Planning Commission may authorize Planning Department staff to review and approve site plans. At the discretion of staff or in the case of an appeal of the decision of Planning Department staff, the Planning Commission will act on the application. For applications presented to the Planning Commission for action, Planning Department staff shall submit a written review and recommendation of the application to the Planning Commission. The Planning Commission will evaluate staff's recommendation in its consideration of the application. The Planning Commission may impose additional or more restrictive requirements if it is determined that it is within the public interest.

Before the Planning Department staff makes a recommendation to the Planning Commission, it shall determine the following:

A. That the intent of the NC district shall not be violated.
B. That the proposed development will be compatible with existing developments.
C. That the development's design will minimize the impact of additional traffic on existing streets.
D. That the size of the proposed development will be scaled to the convenience commercial needs of those residential areas within a 2 - 3 mile radius.
E. That the visual appearance of the development will harmonize with the existing development.
F. That the architectural character blends with the surrounding area.
G. Sales and storage are limited to the interior of the principle structure with the exception of garden supply equipment.

19.3 Site Plan Requirements

A site plan meeting the requirements of this section must be submitted to the Planning Department. In order to ensure proper and expeditious review, the site plan must meet the following criteria:

A. The site plan must be drawn to a scale of not less than 100 feet to 1 inch by a registered engineer/surveyor of the State of South Carolina;
B. A vicinity map, title block, scale, north arrow, site size, and property line survey;
C. The location of applicable setbacks and all existing and proposed easements;
D. The land use for every part of the site and the number of acres devoted to each use;

E. The site's traffic circulation plan, including the location of curb cuts and points of ingress/egress, and also including the location and width of all streets, drives, medians, service areas, dumpster pads, entrances to parking areas, etc.;
F. The site's parking plan, including all off-street parking, loading/unloading areas, and structures; including all parking spaces and their dimensions;
G. The site's sign plan, including location, size, colors, and materials of all exterior signage;
H. The site's lighting plan, including the location, height, and type of all exterior light fixtures;
I. The site's landscaping plan, including location, size, and type of proposed plant material, location of proposed fences, walls, retaining walls or berms, location of any tree protection areas, and location of significant stormwater features.
J. The location of all proposed nonresidential buildings or structures, their general exterior dimensions, and gross square footage;
K. The location of all proposed residential structures, their general exterior dimensions, the number of residential units by type, the number of bedrooms in each unit, and approximate square footage for single-family units;
L. The site's pedestrian circulation plan, including the location of all sidewalks, paths, trails, etc. and the dimensions thereof;
M. Specifications indicating the proposed treatment or improvements to all open space areas and the delineation of those areas proposed for specific types of developed recreational activities;
N. Architectural elevations of proposed buildings.
O. Perspective sketch indicating color and materials of all structures and screening.

19.4 Effect of Site Plan Approval

A site plan meeting the requirements of this section shall be reviewed and approved by the Planning Commission staff prior to the issuing of permits (i.e. grading, encroachment). All Site Plan review approvals are valid for two (2) years, where upon if no permit has been issued, a new Site Plan review will be required. Provided, however, approved site plans covered under this section are subject to the provisions of the County's Vested Rights Ordinance.

ARTICLE 20 PLANNED DEVELOPMENT DISTRICT

20.1 Intent

The review of Final Development Plans for the Planned Development District is intended to guarantee the type and quality of development described in the Statement of Intent and the location and quantity of development shown on the Preliminary Development Plan. This development should be aesthetically pleasing and harmonize with the surrounding development(s).

20.2 Application Procedure

All applications for development in the Planned Development District shall be made to the Planning Department. The Planning Department staff shall provide the applicant or his/her designated representative with an adequate number of public notice signs to allow the applicant or his/her designated representative to properly post and maintain on the property a notice of plan review at least 15 days prior to the date of the Planning Commission meeting. The Planning Commission may authorize Planning Department Staff to review and approve Final Development Plans. At the discretion of Staff or in the case of an appeal of the decision of Planning Department Staff, the Planning Commission will act on the application. For applications presented to the Planning Commission for action, Planning Department Staff shall submit a written review and recommendation of the application to the Planning Commission. The Planning Commission will evaluate Staff's recommendation in its consideration of the application. The Planning Commission may impose additional or more restrictive requirements if it is determined that it is within the public interest.

20.3 Final Development Plan Requirements

A site plan meeting the requirements of this section must be submitted to the Planning Department. In order to ensure proper and expeditious review, the site plan must meet the following criteria:

A. The site plan must be drawn to a scale of not less than 100 feet to 1 inch by a registered engineer/surveyor of the State of South Carolina;
B. A vicinity map, title block, scale, north arrow, site size, and property line survey;
C. The location of applicable setbacks and all existing and proposed easements;
D. The land use for every part of the site and the number of acres devoted to each use;
E. The site's traffic circulation plan, including the location of curb cuts and points of ingress/egress, and also including the location and width of all streets, drives, medians, service areas, dumpster pads, entrances to parking areas, etc.;
F. The site's parking plan, including all off-street parking, loading/unloading areas, and structures; including all parking spaces and their dimensions;
G. The site’s sign plan, including location, size, colors, and materials of all exterior signage;
H. The site’s lighting plan, including the location, height, and type of all exterior light fixtures;
I. The site’s landscaping plan, including location, size, and type of proposed plant material, location of proposed fences, walls, retaining walls or berms, location of any tree protection areas, and location of significant stormwater features.
J. The location of all proposed nonresidential buildings or structures, their general exterior dimensions, and gross square footage;

K. The location of all proposed residential structures, their general exterior dimensions, the number of residential units by type, the number of bedrooms in each unit, and approximate square footage for single-family units;
L. The site's pedestrian circulation plan, including the location of all sidewalks, paths, trails, etc. and the dimensions thereof;
M. Specifications indicating the proposed treatment or improvements to all open space areas and the delineation of those areas proposed for specific types of developed recreational activities;
N. Architectural elevations of proposed buildings.
O. Perspective sketch indicating color and materials of all structures and screening.

20.4 Effect of Final Development Plan Approval

A Final Development Plan (FDP) meeting the requirements of this section shall be reviewed and approved by the Planning Commission staff prior to the issuing of permits (i.e. grading, encroachment). All FDP review approvals are valid for wo (2) years, where upon if no permit has been issued, a new FDP review will be required. Provided, however, approved FDPs covered under this Section are subject to the provisions of the County's Vested Rights Ordinance.

ARTICLE 21 FLEXIBLE REVIEW DISTRICT

21.1 Intent

The review of Final Development Plans for the Flexible Review District is intended to guarantee the type and quality of development described in the Statement of Intent and the location and quantity of development shown on the Preliminary Development Plan. This development should be aesthetically pleasing and harmonize with the surrounding development(s).

21.2 Application Procedure

All applications for development in the Flexible Review District shall be made to the Planning Department. The Planning Department staff shall provide the applicant or his/her designated representative with an adequate number of public notice signs to allow the applicant or his/her designated representative to properly post and maintain on the property a notice of plan review at least 15 days prior to the date of the Planning Commission meeting. The Planning Commission may authorize Planning Department Staff to review and approve Final Development Plans. At the discretion of Staff or in the case of an appeal of the decision of Planning Department Staff, the Planning Commission will act on the application. For applications presented to the Planning Commission for action, Planning Department Staff shall submit a written review and recommendation of the application to the Planning Commission. The Planning Commission will evaluate Staff's recommendation in its consideration of the application. The Planning Commission may impose additional or more restrictive requirements if it is determined that it is within the public interest.

21.3 Final Development Plan Requirements

A site plan meeting the requirements of this section must be submitted to the Planning Department. In order to ensure proper and expeditious review, the site plan must meet the following criteria:

A. The site plan must be drawn to a scale of not less than 100 feet to 1 inch by a registered engineer/surveyor of the State of South Carolina;
B. A vicinity map, title block, scale, north arrow, site size, and property line survey;
C. The location of applicable setbacks and all existing and proposed easements;
D. The land use for every part of the site and the number of acres devoted to each use;
E. The site's traffic circulation plan, including the location of curb cuts and points of ingress/egress, and also including the location and width of all streets, drives, medians, service areas, dumpster pads, entrances to parking areas, etc.;
F. The site's parking plan, including all off-street parking, loading/unloading areas, and structures; including all parking spaces and their dimensions;
G. The site’s sign plan, including location, size, colors, and materials of all exterior signage;
H. The site’s lighting plan, including the location, height, and type of all exterior light fixtures;
I. The site’s landscaping plan, including location, size, and type of proposed plant material, location of proposed fences, walls, retaining walls or berms, location of any tree protection areas, and location of significant stormwater features.
J. The location of all proposed nonresidential buildings or structures, their general exterior dimensions, and gross square footage;

K. The location of all proposed residential structures, their general exterior dimensions, the number of residential units by type, the number of bedrooms in each unit, and approximate square footage for single-family units;
L. The site's pedestrian circulation plan, including the location of all sidewalks, paths, trails, etc. and the dimensions thereof;
M. Specifications indicating the proposed treatment or improvements to all open space areas and the delineation of those areas proposed for specific types of developed recreational activities;
N. Architectural elevations of proposed buildings.
O. Perspective sketch indicating color and materials of all structures and screening.

21.4 Effect of Final Development Plan Approval

A Final Development Plan (FDP) meeting the requirements of this section shall be reviewed and approved by the Planning Commission staff prior to the issuing of permits (i.e. grading, encroachment). All FDP review approvals are valid for two (2) years, where upon if no permit has been issued, a new FDP review will be required. Provided, however, approved FDPs covered under this Section are subject to the provisions of the County's Vested Rights Ordinance.

APPENDIX A. SUBDIVISION JURISDICTION MAP

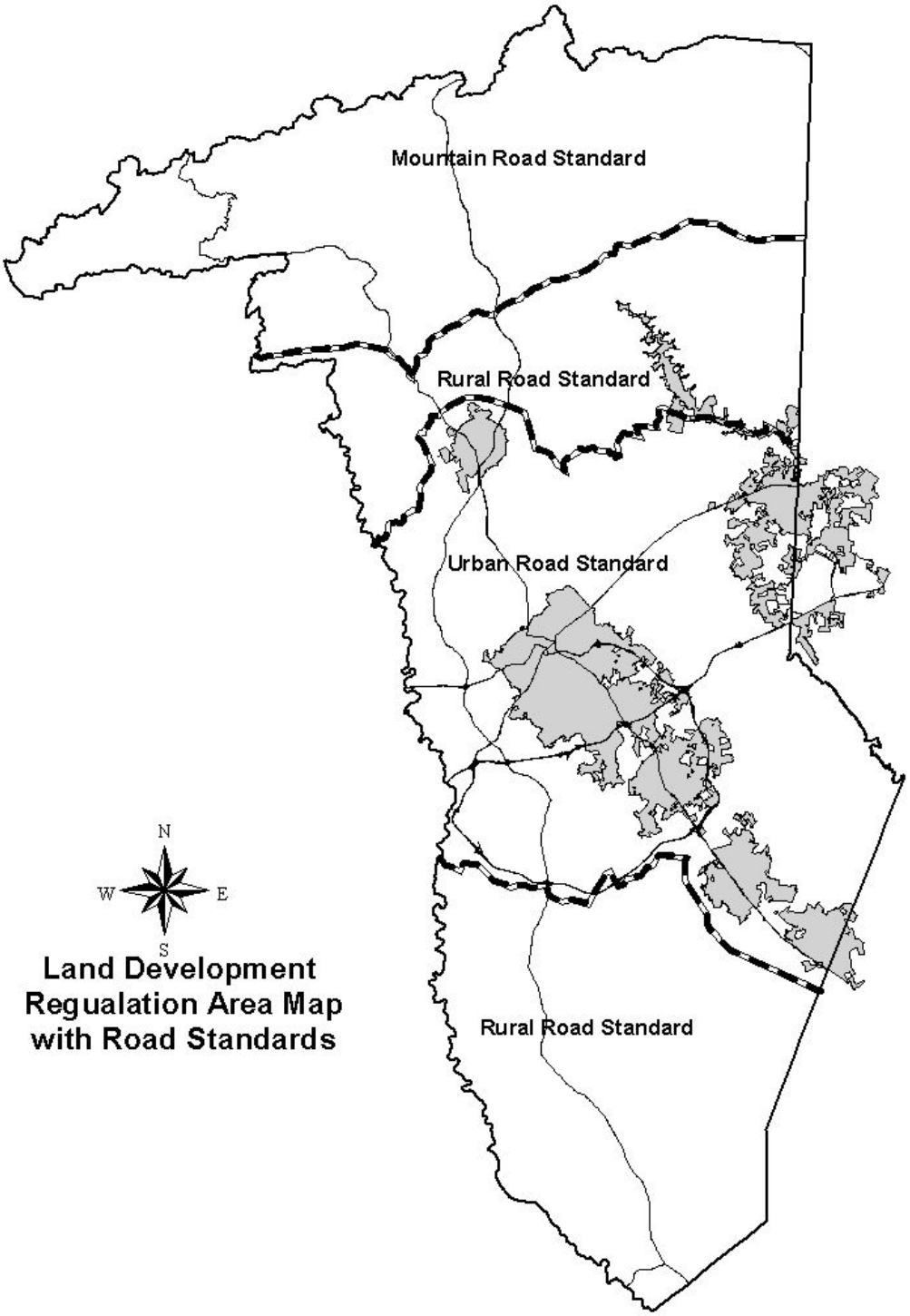

APPENDIX B. ACCEPTABLE PLANT MATERIAL LIST

This list is not intended to be all inclusive, but does, include common trees and shrubs suitable for use in the Greenville area for use within the right-of-way. Due to individual site, soil, moisture, and microclimate conditions, professional expertise should be sought to determine the appropriate plant materials for any particular development project.

Groundcover/ Herb

No minimum setback required

Common Name	**Scientific Name**	**Bioretention type (n/a not applicable)**
alligator flag	*Thalia geniculata*	deep water
arrowhead, broadleaf	*Sagittaria latifolia*	shallow
arrowhead, bulltongue	*Sagittaria lancifolia*	shallow
arrowhead, lance-leaf	*Sagittaria lancifolia*	shallow
arum, arrow	*Peltandra virginica*	shallow
arum, green	*Peltandra virginica*	shallow
aster	*Aster spp.*	n/a
black-eyed susan	*Rudbeckia hirta*	n/a
bluestem, little	*Schizachyrium scoparium*	semi-wet
bulrush, giant	*Schoenoplectus californicus*	deep water
bulrush, softstem	*Schoenoplectus tabernaemontani*	deep water
canna, golden	*Canna flaccida*	deep water
cardinal flower	*Lobelia cardinalis*	shallow
celery, wild	*Vallisneria americana*	n/a
coreopsis	*Coreopsis spp.*	n/a
cutgrass, rice	*Leersia oryzoides*	n/a
deer tongue	*Dichanthelium clandestinum*	n/a
dropseed, prairie	*Sporobolus heterolepis*	n/a
fern, cinnamon	*Osmunda cinnamomea*	semi-wet
fern, royal	*Osmunda regalis*	semi-wet
fern, Virginia chain	*Woodwardia virginica*	semi-wet
forsythia	*Forsythia suspensa*	general
gayfeather, spiked	*Liatris spicata*	n/a
goldenrod	*Solidago spp.*	n/a
grass, broom	*Andropogon glomeratus*	n/a
grass, bushy broom	*Andropogon glomeratus*	n/a
grass, love	*Eragrostis spectabilis*	n/a
grass, pink muhly	*Muhlenbergia capillaris*	n/a
grass, redhead	*Potamogeton perfoliatus*	n/a
grass, switch	*Panicum virgatum*	n/a
grass, wool	*Scirpus cyperinus*	shallow
grass, yellow Indian	*Sorghastrum nutans*	n/a
hawthorn, May	*Crataegus aestivalia*	shallow
hibiscus, swamp	*Hibiscus coccineus*	n/a
indigo, blue wild	*Baptisia australis*	semi-wet

iris	*Iris brevicaulis*	semi-wet
iris, copper	*Iris fulva*	semi-wet
iris, Louisiana	*Iris hexagona*	shallow
iris, southern blue-flag	*Iris virginica*	shallow
iris, yellow	*Iris pseudacorus*	semi-wet
ironweed, giant	*Vernonia gigantea*	general
ironweed, New York	*Vernonia noveboracensis*	shallow
Joe Pye weed	*Eupatorium purpureum*	semi-wet
lily spp.	*Crinum spp.*	shallow
lily, fragrant water	*Nymphaea odorata*	open water
lily, swamp	*Crinum americanum*	shallow
lily, yellow water	*Nymphaea mexicana*	open water
lizard's tail	*Saururus cernuus*	shallow
lotus, American water	*Nelumbo lutea*	open water
mint, dotted	*Monarda punctata*	general
pickerelweed	*Pontederia cordata*	shallow
purpletop	*Tridens flavus*	general
rose, swamp	*Rosa palustris*	semi-wet
rush, soft	*Juncus effusus*	shallow
sea-oats, upland	*Chasmanthium latifolium*	semi-wet
sedge, broom	*Andropogon virginicus*	n/a
sedge, caric	*Carex spp.*	semi-wet
sedge, flat	*Cyperus spp.*	n/a
smartweed	*Polygonum hydropiperoides*	semi-wet
spadderdock	*Nuphar lutea*	open water
spikerush, coastal	*Eleocharis cellulosa*	shallow
spikerush, jointed	*Eleocharis interstincta*	shallow
sunflower, swamp	*Helianthus angustifolius*	semi-wet
sweetflag	*Acorus calamus*	semi-wet
three-square	*Schoenoplectus pungens*	n/a
tickseed	*Coreopsis lanceolata*	n/a
tickseed, dwarf	*Coreopsis auriculata*	n/a
wildrye, Virginia	*Elymus virginicus*	n/a

Shrub, Deciduous (non-evergreen)
(mature height: approximately thirty-six inches): In entrance islands a minimum setback of 2 feet, from face of curb to center of shrub, is required. In all other islands a minimum setback of 7.5 feet, from face of curb to center of shrub, is required.

Common Name	**Scientific Name**	**Bioretention type (n/a not applicable)**
beautyberry, American	*Callicarpa americana*	shallow
blackhaw	*Viburnum prunifolium*	shallow
buttonbush	*Cephalanthus occidentalis*	shallow
chokeberry, brilliant	*Aronia melanocarpa*	shallow
dogwood, red Osier	*Cornus sericea*	semi-wet
elderberry	*Sambucus nigra*	deep water
ninebark, common	*Physocarpus opulifolius*	shallow
pepperbush, sweet	*Clethra alnifolia*	shallow
possumhaw	*Ilex decidua*	shallow
spice bush	*Lindera benzoin*	general
sumac	*Rhus typhina*	general
sweetspire, Virginia	*Itea virginica*	general
winterberry	*Ilex verticillata*	shallow

Shrub, Evergreen

anise	*Illicium parviflorum*	shallow
azalea	*Rhododendron obtusum var.*	shallow
boxwood, dwarf	*Buxus sempervirens*	general
boxwood, Harland	*Buxus harlandii*	shallow
holly, dwarf Yaupon	*Ilex vomitoria (cultivars)*	general
holly, inkberry	*Ilex glabra*	general
holly, Japanese	*Ilex crenata*	shallow
holly, weeping yaupon	*Ilex vomitoria (cultivars)*	n/a
holly, yaupon	*Ilex vomitoria*	general
juniper, Parsons	*Juniperus davurica*	n/a
juniper, savin	*Juniperus sabina*	n/a
laurel, Schipka	*Prunus laurocerasus*	n/a
magnolia, little gem	*Magnolia grandiflora (cultivars)*	n/a
myrtle, southern wax	*Morella cerifera (Myrica pensylvanica)*	n/a
olive, tea	*Osmanthus fragrans*	n/a
swampprivet, eastern	*Forestiera acuminata*	shallow

Small Tree, Deciduous (non-evergreen)
(mature height: less than twenty-five feet): In all islands a minimum setback of 5 feet, from face of curb to center of tree, is required.

Common Name	**Scientific Name**	**Bioretention type (n/a not applicable)**
cherry, higan	*Prunus subhirtella*	deep water
cherry, Kwanzan	*Prunus serrucata*	shallow
cherry, Yoshino	*Prunus x yedoensis*	general
dogwood, flowering	*Cornus florida*	semi-wet
dogwood, Kousa	*Cornus kousa*	general
fringe tree	*Chionanthus virginicus*	general
hornbeam, American	*Carpinus caroliniana*	shallow
magnolia, saucer	*Magnolia x soulangiana*	semi-wet
magnolia, star	*Magnolia stellata*	semi-wet
maple, Amur	*Acer ginnala*	shallow
maple, Japanese	*Acer palmatum*	deep water
maple, trident	*Acer buergeranum*	semi-wet
myrtle, crepe	*Lagerstroemia indica*	n/a
plum, cherry	*Prunus cerasifera*	n/a
raintree, golden	*Koelreuteria paniculata*	n/a
redbud, eastern	*Cercis canadensis*	n/a
redbud, Mexican	*Cercis canadensis* var. *mexicana*	n/a
redbud, Oklahoma	*Cercis reniformis* var. *texensis* 'Oklahoma'	n/a
serviceberry	*Amelanchier arborea*	semi-wet
silverbell, Carolina	*Halesia carolina*	general
smoketree	*Cotinus coggygria*	n/a
snowbell, Japanese	*Styrax japonica*	n/a
witch hazel, common	*Hamamelis virginiana*	n/a

Small Tree, Evergreen

magnolia, sweetbay	*Magnolia virginiana*	n/a

Large Tree, Deciduous (non-evergreen)
(mature height: twenty-five to thirty-five feet): In all islands a minimum setback of 10 feet, from face of curb to center of tree, is required.

Common Name	**Scientific Name**	**Bioretention type (n/a not applicable)**
baldcypress	*Taxodium distichum*	deep water
beech, American	*Fagus grandifolia*	semi-wet
birch, river	*Betula nigra*	semi-wet
chestnut, red horse	*Aesculus x carnea* 'Fort McNair'	n/a
coffee tree, Kentucky	*Gymnocladus dioicus*	semi-wet
elm, Princeton	*Ulmus americana* 'Princeton'	n/a

fig, common	*Ficus carica*	general
ginkgo (male only)	*Ginkgo biloba*	shallow
gum, black	*Nyssa sylvatica*	general
hackberry	*Celtis occidentalis*	general
hawthorn, Washington	*Crataegus phaenopyrum*	general
hickory, water	*Carya aquatica*	shallow
linden, American (basswood)	*Tillia americana*	n/a
linden, littleleaf	*Tillia cordata*	n/a
locust, black	*Robinia pseudoacacia*	semi-wet
locust, honey (thornless var)	*Gleditsia triacanthos*	shallow
maple, Freeman	*Acer* × *freemanii* 'Jeffersred' Autumn Blaze	semi-wet
maple, red	*Acer rubrum*	semi-wet
maple, silver	*Acer saccharinum*	deep water
maple, sugar	*Acer saccharum*	shallow
mulberry, red	*Morus rubra*	shallow
oak, chestnut	*Quercus prinus*	deep water
oak, laurel	*Quercus laurifolia*	deep water
oak, northern red	*Quercus rubra*	general
oak, Nuttall	*Quercus nuttalli*	shallow
oak, overcup	*Quercus lyrata*	shallow
oak, pin	*Quercus palustris*	shallow
oak, scarlet	*Quercus coccinea*	shallow
oak, Shumard	*Quercus shumardii*	general
oak, southern red	*Quercus falcata*	shallow
oak, swamp chestnut	*Quercus michauxii*	semi-wet
oak, swamp white	*Quercus bicolor*	semi-wet
oak, water	*Quercus nigra*	semi-wet
oak, white	*Quercus alba*	shallow
oak, willow	*Quercus phellos*	general
pagoda, Japanese	*Sophora japonica*	general
pecan	*Carya illinoinensis*	shallow
persimmon	*Diospyros virginiana*	shallow
planetree	*Planera aquatica*	general
poplar, tulip	*Liriodendron tulipifera*	shallow
sassafras	*Sassafras albidum*	general
sourwood	*Oxydendrum arboreum*	shallow
sycamore, American	*Platanus occidentalis*	general
willow, black	*Salix nigra*	shallow
yellowwood	*Cladrastis kentukea*	general
zelkova, Japanese	*Zelkova serrata*	general

Large Tree, Evergreen

arborvitae, American	*Thuja occidentalis*	n/a
cedar, deodar	*Cedrus deodara*	shallow
cedar, eastern red	*Juniperus virginiana*	n/a
cedar, Japanese	*Cryptomeria japonica*	n/a
holly, American	*Ilex opaca*	semi-wet
juniper, Hollywood	*Junipers chinensis*	n/a
laurel, Carolina cherry	*Prunus caroliniana*	n/a
magnolia, southern	*Magnolia grandiflora*	semi-wet
pine, eastern white	*Pinus strobus*	n/a
pine, loblolly	*Pinus taeda*	semi-wet
pine, spruce	*Pinus glabra*	n/a
pine, Virginia	*Pinus virginiana*	n/a

APPENDIX C. SPECIFICATIONS FOR ALTERNATIVE TRAFFIC CALMING MEASURES

All graphics were taken from www.trafficcalming.org and Traffic Calming: State of the Practice (Institute of Transportation Engineers)

RAISED INTERSECTIONS

RAISED INTERSECTIONS ARE FLAT RAISED AREAS COVERING ENTIRE INTERSECTIONS, WITH RAMPS ON ALL APPROACHES AND TEXTURED MATERIALS ON THE FLAT SECTION.

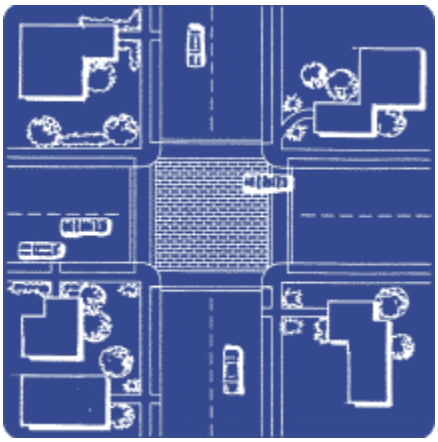

DESIGN CHARACTERISTICS: THE ENTIRE INTERSECTION IS RAISED 8”-10” WITH A TEXTURED AND/OR PAINTED PAVEMENT SURFACE. BRICK PAVERS MAY **NOT** BE USED.

CRITERIA: INTERSECTION OF TWO LOW SPEED STREETS

DESIRED TRAFFIC EFFECTS: INCREASE PEDESTRIAN SAFETY AND REDUCE SPEEDS.

TYPICAL CONSTRUCTION COST: $5,000-$10,000 PER INTERSECTION

RAISED CROSSWALKS

RAISED CROSSWALKS ARE SPEED TABLES THAT ARE MARKED AS CROSSWALKS AND SIGNAGE TO CHANNELIZE PEDESTRIAN CROSSINGS, PROVIDING PEDESTRIANS WITH A LEVEL STREET CROSSING.

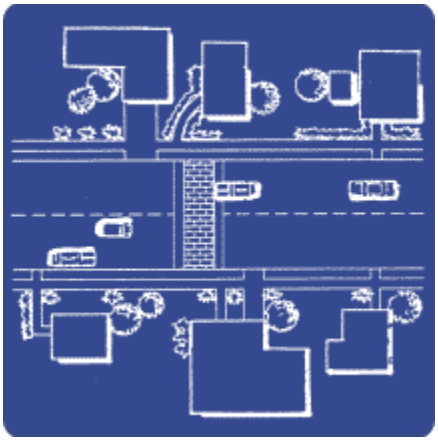

DESIGN CHARACTERISTICS: SIMILAR TO SPEED HUMPS

CRITERIA: SIMILAR TO SPEED HUMPS

DESIRED TRAFFIC EFFECTS: INCREASE PEDESTRIAN SAFETY AND REDUCE SPEED

TYPICAL CONSTRUCTION COST: $1,200-$2,500 PER CROSSWALK

CHOKERS

CHOKERS ARE CURB EXTENSIONS OR ISLANDS ON ONE OR BOTH SIDES OF THE STREET THAT NARROW THE STREET AT THAT LOCATION.

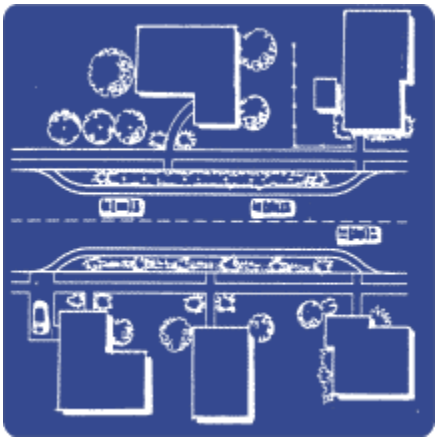

DESIGN CHARACTERISTICS: REDUCES ROADWAY WIDTH AT NARROWED PORTION

CRITERIA: BEST USED ON LOWER VOLUME STREETS

DESIRED TRAFFIC EFFECTS: REDUCE SPEEDS

TYPICAL CONSTRUCTION COST: $2,000-$5,000

NECKDOWNS (BULBOUTS)

NECKDOWNS ARE CURB EXTENSIONS AT INTERSECTIONS THAT REDUCE ROADWAY WIDTH CURB-TO-CURB.

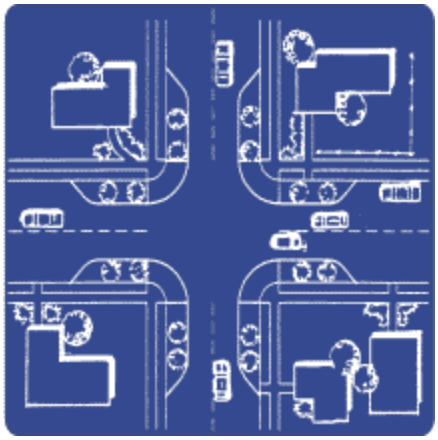

DESIGN CHARACTERISTICS: REDUCES PEDESTRIAN CROSSING DISTANCE BY NARROWING APPROACHES TO MINIMUM ACCEPTABLE LANE WIDTHS

CRITERIA: BEST USED WITH CROSSWALKS

DESIRED TRAFFIC EFFECTS: INCREASE PEDESTRIAN SAFETY AND REDUCE SPEEDS

TYPICAL CONSTRUCTION COST: $1,500-$5,000

TRAFFIC CIRCLES

TRAFFIC CIRCLES ARE ISLANDS PLACED IN INTERSECTIONS, AROUND WHICH TRAFFIC CIRCULATES.

DESIGN CHARACTERISTICS: TWO-LANE ROADS, NO OTHER TRAFFIC CONTROL NEEDED, TRUCKS MAY TURN IN FRONT OF CIRCLE, CIRCLE DIAMETER 15'-20'

CRITERIA: INTERSECTION VOLUME < 4000 VPD

DESIRED TRAFFIC EFFECTS: REDUCE SPEEDS AND COLLISIONS

TYPICAL CONSTRUCTION COST: $7,500-$15,000 PER INTERSECTION

CHICANES

CHICANES ARE CURB EXTENSIONS OR ISLANDS THAT ALTERNATE FROM ONE SIDE OF THE STREET TO ANOTHER, FORMING S-SHAPED CURVES.

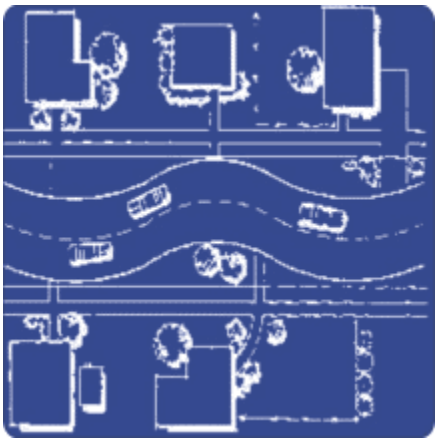

DESIGN CHARACTERISTICS: MOST EFFECTIVE WHEN APPLIED AT INTERVALS ALONG A STREET

CRITERIA: LOW VOLUME STREETS WITH ADEQUATE SIGHT DISTANCE

DESIRED TRAFFIC EFFECTS: REDUCE SPEEDS

TYPICAL CONSTRUCTION COST: $2,000-$7,500

CENTER ISLAND NARROWINGS

CENTER ISLAND NARROWINGS ARE ISLANDS LOCATED ALONG THE STREET CENTERLINE THAT NARROW THE STREET AT THAT LOCATION.

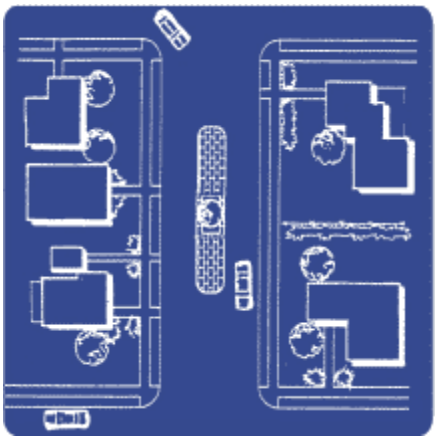

DESIGN CHARACTERISTICS: CHANGES VEHICLE PATH OR REDUCES PAVEMENT WIDTH

CRITERIA: SHORT MEDIANS CAN BE USED ON RESIDENTIAL STREETS; CAN BE PEDESTRIAN REFUGE

DESIRED TRAFFIC EFFECTS: REDUCE SPEEDS

TYPICAL CONSTRUCTION COST: $2,000-$7,500

COMBINED MEASURES

Raised Crosswalk with Center Island

Neckdown with Center Island

Raised Intersection with Neckdown

Center Island with Chokers

OTHER MATTERS

Split Median

Hammerhead

APPENDIX D. WATER QUALITY GUIDELINES FOR COMMERCIAL & COMMUNITY FACILITY PARKING LOTS

Note: This appendix to be used in (Article 10 & 12 POD, FRD, PD, OD, C1, 2 & 3, SI, I – 1 & 2, NC)

A: "Parking lot" means land area or facility for parking or storage of motor vehicles used for business, commerce, industry or personal use. Large expanses of pavement can be very detrimental to the environment in a number of ways:

- The impervious surface means that rainwater flows to storm sewers rather than infiltrating into the ground to recharge groundwater;
- Oil and other fluids that leak from parked vehicles contaminate the stormwater; and
- The pavement absorbs the heat of the sun and causes heat island effects and raises the temperature of the stormwater runoff.

All paved parking lots are encouraged to employ features that will reduce the peak flow rate and/or peak volume that the site would otherwise generate. Parking structures can also have reduced impact on stormwater systems by incorporating green roofs to retain and filter stormwater. Types of facilities and the design of those facilities that provide storage for stormwater can be found in Greenville County's Stormwater Design Manual. The general and specific guidelines outlined below will also be followed.

B. General Guidelines:

1. Prevent stormwater pollutants of concern such as heavy metals, oil and grease and polycyclic aromatic hydrocarbons that are deposited on parking lot surfaces by motor vehicles from entering into the stormwater conveyance system.
2. The perimeter and interior landscaped areas will be designed to absorb stormwater runoff. The paved areas of the parking lot around the landscaped areas would be graded so that stormwater flows into the landscaped areas in order to maximize stormwater runoff retention on site, rather than having it drain into the roadside storm drain conveyance system.
3. Prevent erosion and reduce the sediment load in stormwater by dispersing drainage to minimize flow concentration and velocity.
4. Post-Construction Treatment BMP's are required to either/or mitigate (infiltrate, filter or treat) or flow based/volumetric based treatment control design the stormwater runoff on site.
5. Provide proof of ongoing BMP Maintenance for structural BMP or follow maintenance plan for LID's.
6. Provide storm drain system stencil or marker on catch basins built as part of project site.

C. Specific Guidelines

1. Properly Design Parking Areas
    a) Reduce impervious land coverage of parking area by providing planter strips between parking bays.
    b) Infiltrate runoff into landscape areas before it reaches the storm drain system
    c) Treat runoff on-site before it reaches the street and storm drain system.

2. The site drainage alternatives for parking lot developments may include one or a combination of the following;
    a) A vegetated infiltration trench or bio-swale (planter strip) that captures, infiltrates and/or filters the stormwater runoff from parking lot surfaces.
    b) Catch basins with filter inserts can be used for every 5,000 sq. ft. of parking lot areas for sites where infiltration and bio-filtration are not suitable based on site conditions.
    c) Hydrodynamic systems can be used for lot areas up to 20,000 sq. ft. where infiltration and bio-filtration are not suitable based on site conditions.

3. For parking areas that are used infrequently, especially overflow parking areas, it may be possible to use a surface other than asphalt in order to reduce stormwater runoff and allow greater infiltration. Depending on the site characteristics, any of the following may be appropriate;
    a) Leaving an area unpaved or using turf blocks (aka grass pavers) an open-cell unit paver in which cells are filled with soil and planted with turf. The pavers are made of concrete or synthetic which distribute the weight of traffic and prevent compression of underlying soil.
    b) Using paving stones (aka unit pavers) are in permeable blocks made of brick, stone or concrete, set on a prepared sand base.
    c) Using pervious concrete or porous asphalt (for areas that will get moderate use but not used by heavy trucks). Porous asphalt and pervious concrete appear to be the same as traditional asphalt or concrete pavement. However, they are mixed with a very low content of fine sand, so that water can pass through small openings within the pavement.

4. Parking Structures can also have reduced impact on stormwater systems by incorporating green roofs to retain and filter stormwater.

APPENDIX E. LOW IMPACT DEVELOPMENT FEATURES WITHIN THE CENTERS AND CORRIDORS

*****See the Future Land Use Map in the Greenville County Comprehensive Plan to identify Centers and Corridors Land Use**

A. PURPOSE

When requesting rezoning within the Centers and Corridors Land Use Category, the impact of the increase in density on the requirements for stormwater management (water quantity and quality) will have to be considered. In high density areas, typically there is little open area where larger stormwater management features can be placed. The use of Low Impact Development (LID) features are encouraged to ensure that water quality requirements are being met. LIDs can help mitigate the impacts of urban development through various means: reduction in impervious area, promoting infiltration and aiding in the improvement of water quality. The purpose of this section is to provide standards, criteria and guidance on the appropriate use of Low Impact Development features (LIDs) within the Centers and Corridors Land Use Category.

B. LOW IMPACT DEVELOPMENT FEATURES

The following is a list of low impact development features that are viable options within Greenville County for the Centers and Corridors Land Use Category (Consult the Greenville County Stormwater Management Design Manual (GC SMDM) for design and construction specifications and details of these features):

1. Green Roofs - A green roof is a conventional roof that is covered with a layer of vegetation. Also known as "living roofs," green roofs serve several purposes for a building, such as absorbing rainwater, providing insulation, creating a habitat for wildlife, and helping to lower urban air temperatures and combat the heat island effect. There are two types of green roofs: intensive roofs, which are thicker and can support a wider variety of plants but are heavier and require more maintenance, and extensive roofs, which are covered in a light layer of vegetation and are lighter than an intensive green roof.

   A "green" roof would need to comply with the imposed loads of the roof under the building code, and designed under Alternate Materials and Methods as provided for in Chapter One of the building code.

2. Pervious Pavement - Pervious pavement is designed to allow percolation or infiltration of stormwater through the surface into the soil below where the water is naturally filtered and pollutants are removed. Pervious pavements will be limited to non-street surfaces, such as sidewalks, low volume or overflow parking areas. (Note: confirm this is in Design Manual Section 10.3 - appropriate types of pervious pavements are inclusive) (http://www.lakesuperiorstreams.org/stormwater/toolkit/paving.html) Pervious pavement not allowed in the County right of way.

3. Building or Planter Boxes – (Infiltration) Planter Boxes allows runoff to enter the Box and then filter through vegetation and soil; Infiltration Planter Boxes are characterized by a direct interface with the soil (uncompacted base) which allows for infiltration of runoff collected in the Box within several (3-4) hours. Because of the design connection to roof leader/downspout, these Boxes will tend to be located close to *structures*. Furthermore, such locations require that infiltration being designed for not leak into lower levels of *structures* (basements, etc.). If these lower levels do exist, they must be waterproofed, unless a separation distance is provided. Select plants with care, again using those tolerant of these highly variable hydrologic

conditions (rushes, reeds, sedges, dogwoods, currants, others). A minimum Box width of 30 inches is recommended. Planter boxes are not allowed in the County right of way. (http://www.tredyffrin.org/pdf/publicworks/CH2%20-20BMP6%20Planter%20Box.pdf)

4. Disconnected Impervious Areas – directing runoff to grass or pervious areas located into pervious pavement, sidewalk planters, or curb extensions with plantings. Disconnected rooftop drainage can reduce the runoff flow rates from developed areas. The disconnection involves directing stormwater runoff from rooftops towards pervious areas where it is allowed to filter through vegetation and other landscaped material and infiltrate into the soil. This practice is applicable and most beneficial in low-density residential or commercial developments having less than 50 percent impervious area. Disconnection is not applicable to large buildings where the volume of runoff from the rooftops will cause erosion or degradation to receiving vegetated areas.

5. Rain Barrels and Cisterns - A rain barrel is a system that collects and stores rainwater from roofs that would otherwise run off and be diverted to storm drains, streams, and rivers. (Note: add specific notes regarding rain barrels Design Manual)

6. Courtyard Green Spaces – located in the midst of multi-family residences, this open green area can be used for infiltration from stormwater runoff from sidewalks, driveways and roofs; stormwater/service alleys may be necessary in conjunction with courtyards. (See Upstate Forever information for design information; add minimum specifications to the Design Manual)

7. Stormwater/Service Alleys – designed as private, one-way streets, constructed with pervious materials, can reduce the runoff into the storm sewer system. (60% pervious/40% impervious; stormwater alleys include stormwater management *structures* capable of managing the first inch of rainfall, or first flush, within the alley.) (See Upstate Forever information for details)

8. Bioretention Areas - are landscaping areas/ features adapted to treat stormwater runoff on the project site. Bioretentions are usually located in parking lot islands or within small pockets within residential land uses. Surface runoff is directed into shallow, landscaped depressions. These depressions are designed to incorporate many of the pollutant removal mechanisms that operate in forested ecosystems. During storms, runoff ponds above the mulch and soil in the system. Runoff from larger storms is generally diverted past the facility to the storm drain system. The remaining runoff filters through the mulch and prepared soil mix. Typically, the filtered runoff is collected in a perforated underdrain and returned to the storm drain system.

9. Grass Swales - A grassed swale is a graded and engineered landscape feature appearing as a linear, shallow, open channel with trapezoidal or parabolic shape. The swale is vegetated with flood tolerant, erosion resistant plants. The design of grassed swales promotes the conveyance of stormwater at a slower, controlled rate and acts as a filter medium removing pollutants and allowing stormwater infiltration.

10. Enhanced Grass Swales – Enhanced swales are vegetated open channels that are explicitly designed and constructed to capture and treat stormwater runoff within dry or wet cells formed by check dams or other *structures*. [Enhanced grass swales can be used outside of the ROW and between lots.] (See GC SMDM)

11. Infiltration Trenches - An infiltration trench is an excavated trench filled with stone aggregate used to capture and allow infiltration of stormwater runoff into the surrounding soils from the bottom and sides of the trench. (See GC SMDM)

12. Sand Filters - Sand filters can be used for stormwater quality control and managing stormwater runoff volumes. Sand filters are composed of at least two components: a sedimentation chamber and a filtration chamber. The sedimentation chamber removes floatables and heavy sediments, while the filtration chamber removes additional pollutants by filtering flow through a sand bed. Treated filtrate is normally diverted back to the storm drainage system via an underdrain system or pipe network. OR,

    Sand filters - multi-chamber *structures* designed to treat stormwater runoff through filtration, using a sand bed as its primary filter media. Filtered runoff may be returned to the conveyance system or partially exfiltrate into the soil. (See GC SMDM)

13. Shared Drives - A shared driveway is generally a driveway jointly owned by the owners of the properties it gives access to. Details of the way in which it is owned (i.e. owned in common or with reciprocal right of way easements) are shown on the deeds. Maintenance needs to be arranged between the joint owners, and responsibilities may be specified in the easement documents. Shared driveways are very common in newer commercial areas, for instance at strip malls, regional shopping centers, and office parks. http://definitions.uslegal.com/s/shared-driveway

14. Split Track Driveways/Ribbon Driveways/Grass Strips- are driveways that have two strips of pavement with grass or other porous surface in between. They are cheaper to build and reduce impervious coverage.

15. Curb Extensions – to be used between street parking areas as "bump-outs" from the curb. Vegetated swales in the curb extensions function as in-street Stormwater management *structures*, absorbing and infiltrating runoff from the street and from the adjacent sidewalk. (See Upstate Forever Page 15 for specs and preconditions; review requirements in the Design Manual and see if we need to include in the LDR)

16. Cul-de-sac Center Islands – A landscaped island created in the center of a cul-de-sac where driving does not occur. This island can be designed as a depression to accept stormwater runoff from the surrounding pavement, thus furthering infiltration.

C. WATER QUALITY REQUIREMENTS

In using LIDS, there can be numerous site constraints to the location and effectiveness of the LID feature being used. Please refer to the Greenville County Stormwater Design Manual for specific details.

1. Centers and Corridors: three areas have been defined within Centers based on the type of developments located in those areas.

    a. The Core Area* is where the most intensive commercial and highest density residential development is located. In this area treatment is limited to roofs, plazas and courtyards. Treatment generally occurs over or adjacent to buildings in contained systems or planters that drain to the storm sewer.

b. The Transition Area is developed with less intensive commercial uses including professional offices, civic uses (fire stations, libraries, schools, churches) and a variety of medium to high density residential uses. In the Transition Area, treatment may be provided on roofs, plazas, courtyards, islands, buffers, and medians at surface parking and gardens. Landscape areas may be used to infiltrate stormwater into the ground when they are at a sufficient distance from buildings.

c. The Residential Support Area is comprised of a variety of both multi-family and single family housing types at densities less than those found in the Core and Transition areas but higher than those found outside of the center. The water quality focus in the area is on reducing runoff from homes. Yard and gardens surrounding each *structure* or group of *structures* receives runoff from roofs as well as paved walks and drives.

2. Road Design Standards - All LID designs shall comply with the Greenville County Stormwater Management Design Manual, (GC SMDM), latest edition. In addition, the following shall apply:

   a. LIDs located within the Greenville County ROW shall not impact the integrity of the road design nor shall they conflict with design criteria of the road requirements.

   b. The filling in of a ditch if that ditch functions as part of a stormwater conveyance system in the ROW will not be allowed.

   c. Retrofitting of existing conveyances systems and installing a new BMP for water quantity and/or water quality may be an option used in Core Areas.

D. WATER QUANTITY REQUIREMENTS

The hydrologic effects of development can cause a multitude of problems, including significant flooding. In the high density environment, stormwater runoff must be routed efficiently and effectively to minimize flooding.

1. Based on the location within the Centers and Corridors Land Use Category, water quantity/runoff volume will have to be addressed with appropriate features. See the Greenville County Stormwater Management Design Manual.

2. If there is an existing stormwater management feature at the site, this feature will have to meet the current design criteria for the new development. The design should make all attempts to meet the water quantity and water quality requirements on-site.

3. For highly density areas such as Core Areas, and possibly the Transition Area, detention basins, dry or wet, are not applicable due to space constraints. Underground detention, larger common plan stormwater regional facilities (if present) may be viable options, along with the use of LIDs, which can help reduce the runoff volume and provide water quality.

4. For Transition Areas, runoff storage may be combined with stormwater quality treatment areas using LIDS and on-site or off-site (regional) facility.

5. For Residential Areas, on-site facilities using LIDs can be used to meet both water quantity and quality requirements.

E. RETROFITTING

1. Retrofitting is a process that involves the modification of existing control *structures* or conveyance systems, initially designed to safely convey or temporarily store stormwater runoff to minimize flooding. Redevelopment within the Centers and Corridors Land Use areas may require retrofitting existing stormwater control and conveyance systems to meet the current standards for stormwater quantity and water quality. (Refer to the GC Stormwater Design Manual and Stormwater Ordinance)

2. In areas previously developed and now being retrofitted, installing a new BMP for water quantity and water quality may be required for some existing conveyances systems.

F. ALLOWABLE LIDS WITHIN THE GREENVILLE COUNTY ROW

Details can be found for each LID for this section in the GC SMDM. (Need to update the Design Manual to include all LIDs in this section.) For any water quality feature located within the ROW, only runoff from the roadway can be directed into the feature. (* Exception will be made in the Core and Transition Areas on case-by-case basis.) All offsite Stormwater should be directed to the storm drain system.

1. Grass Buffers
   a. See the Greenville County Stormwater Management Design Manual (SMDM) for grassing specifications.
2. Vegetated Swales
   b. Must meet the minimum design requirement for conveyances
      i. designed for the 25 year storm
      ii. maximum slope and velocities as outlined in the Design Manual
   c. Can also be used in Cul-de-sac Center Islands and Curb Extensions provided there is adequate space and volume to meet design criteria
3. Enhanced Grass Swales
   a. To be used only in cul-de-sac islands and curb extensions
   b. Must meet the minimum design requirement for runoff volume from the road only
      i. designed for the 25 year storm
      ii. maximum slope and velocities as outlined in the Design Manual
   c. To qualify for water quality, the swale must be an enhanced grass swale with engineered soils and/or underdrain system.
   d. Underdrains should be implemented to ensure that volume in excess of the water quality volume will flow into the storm drain system.
4. Pervious Pavement
   a. Will be limited to sidewalks
   b. Appropriate sub soils must be present otherwise underdrains may be necessary
   c. Must be appropriately built to handle pedestrian and automobile traffic (in driveways)
5. Planter Boxes – will be allowed in the ROW as engineered features to handle road runoff only.
   a. May be used in sidewalks areas, Curb Extensions and Cul-de-sac Islands.
   b. Underdrains should be implemented to ensure that volume in excess of the water quality volume will flow into the storm drain system.
6. Bioretention Areas
   a. Can be used in Cul-de-sac Center Islands, curb extensions, and right of way provided there is adequate space and volume for the sand filter.

   b. Underdrains should be implemented to ensure that volume in excess of the water quality volume will flow into the storm drain system.
7. Sand Filters
   a. Can be used in Cul-de-sac Center Islands, curb extensions, and right of way provided there is adequate space and volume for the sand filter.
8. Curb Extensions
   a. Curb extensions are only appropriate where there is an on-street parking lane. Curb extensions should not extend into travel lanes, bicycle lanes, or shoulders. The turning needs of larger vehicles, such as school buses, must be considered in curb extension design.
   b. The curb extensions can be used for the location of LID features such as bioretention areas and infiltrations trenches, provided there is adequate space/ volume within the curb extension for the feature.
9. Cul-de-sac Center Island
   a. The center island of the cul-de-sac can be used for the location of LID features such as bioretention areas and infiltrations trenches, provided there is adequate space/volume within the island for the feature.

G. MATRIX: APPLICABILITY OF LIDS

The Centers and Corridors Land Use Category recommends an ideal ratio mix of acres of non-residential uses to residential uses. Based on these ratios, appropriate LID features have been listed for use in these categories (Core, Transition and Residential). To simplify the selection of BMPs based on the basic components of a Center (Core, Transition, and Residential), the following matrix has been established:

LID Feature	Runoff Volume	Water Quality Treatment	Land Use Category			Degree of Maintenance (E, M, D) *	Design Criteria Found in SWDM	Use Within ROW	Special Notes
			Core	Transition	Residential				
Green Roofs		X	X	X		M			Compliance with Building Codes
Pervious Pavement (Sidewalks/Driveways)	X		X	X	X	E		L	Pervious Sidewalks will be allowed in the ROW; driveways can be pervious up to the ROW
Grass Areas		X		X	X	E		X	
Vegetative Swales	X	X		X	X	E		L	Only non-enhanced swales will be allowed in the ROW; Can only be used in the Cul-de-sac Island and Curb Extension and only for the road runoff
Planter Boxes for Building or Sidewalks	X	X	X	X	X	M		L	Can only be used in the Cul-de-sac Island and Curb Extension and only for the road runoff
Disconnected Impervious Areas	X	X		X	X	E			
Rain Barrels and Cisterns	X		X	X	X	E			
Courtyard Green Spaces	X	X		X	X	E			Other LID features could be placed within the courtyard for additional benefits
Stormwater/Service Alleys	X	X		X	X	M			
Bioretention Areas	X	X		X	X	M		L	Can only be used in the Cul-de-sac Island and Curb Extension and only for the road runoff
Enhanced Grassed Swales	X	X		X	X	M		L	Can only be used in the Cul-de-sac Island and Curb Extension and only for the road runoff
Infiltration Trenches	X	X	X	X	X	M		L	Can only be used in the Cul-de-sac Island and Curb Extension and only for the road runoff
Sand Filters		X	X	X	X	M		L	Can only be used in the Cul-de-sac Island and Curb Extension and only for the road runoff
Shared Drives				X	X	E			
Split Track/Grass Strip/Ribbon	X	X		X	X	E			
Curb Extensions		X	X	X	X	M		X	Based on LID feature used (bioretention, infiltration. Etc) used within curb extension
Cul-de-sac Island									

X – Applicable E – Easy M – Moderate D – Difficult L – Limited Use

H. MAINTENANCE OF LIDS WITHIN THE COUNTY ROAD RIGHT-OF WAY (ROW)

There are numerous surface elements in the street right of way that require regular or periodic maintenance. Maintenance responsibility for these elements varies. In areas rezoned to the Center and Corridors Land Use Category, the property owner will be responsible for maintenance, operation and repair of all LID features, other than pervious sidewalk located in the ROW.

1. The use of LIDs within the Greenville County public right of way requires a maintenance agreement and a hold harmless clause. The purpose of these agreements is to clarify that the maintenance responsibilities for certain elements of the street right of way lie with the private property owner (individual, HOA or POA). Approved maintenance agreements become part of the property deed that is recorded with the Greenville County RMC Office.The as-built (or record) drawings to be included in the agreement.

2. Maintenance of LIDs is critical to the successful functioning of these types of systems and will be included as a project permit condition. Maintenance may depend on the LID chosen, but may include on-going sweeping, debris removal, and landscape maintenance. Refer to maintenance needs for LID features in the Greenville County Stormwater Design Manual.

I. PERMITTING - APPLICATION PROCESS

1. Stormwater Concept Plan for Innovative Designs

    a. If an LID approach is being considered, the applicant will be required to participate in early design guidance, Stormwater Concept Plan Process, with the Land Development Division to discuss possible site constraints, existing drainage problem areas, transportation needs, soil conditions, design and accessibilities, and maintenance responsibilities. This Concept Plan should focus on the proposed layout, LIDs and BMPs for during and post construction applications that are unique and require a non-standard approach. When LDD has agreed to the concept presented then the applicant can proceed to develop a preliminary set of plans that incorporates the concepts agreed upon.

2. Approval Process – coordinating with other departments (**Building Safety**, Community Planning, Development and Public Works Department, Roads and Bridges, etc.) and other agencies such as SCDOT and SCDHEC.

3. Fees – See the Land Development Division's web page for the fee schedule that applies for the scope of work associated with the proposed project. (http://www.greenvillecounty.org/Land_Development)

APPENDIX F. MISCELLANEOUS DESIGN DETAILS

CATCH BASINS

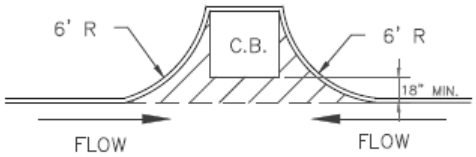

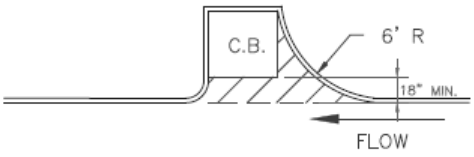

NOTES:
1. Cross–hatching indicates sloped grade.
2. Greater radii may be required for catch basin throat aprons to insure trap efficiency that will accommodate street slope and/or flow volumes.

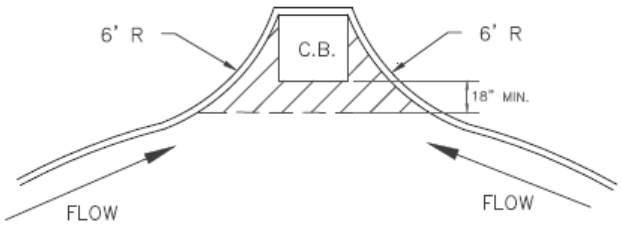

TYPICAL CATCH BASIN DETAILS

N.T.S

TYPE 9

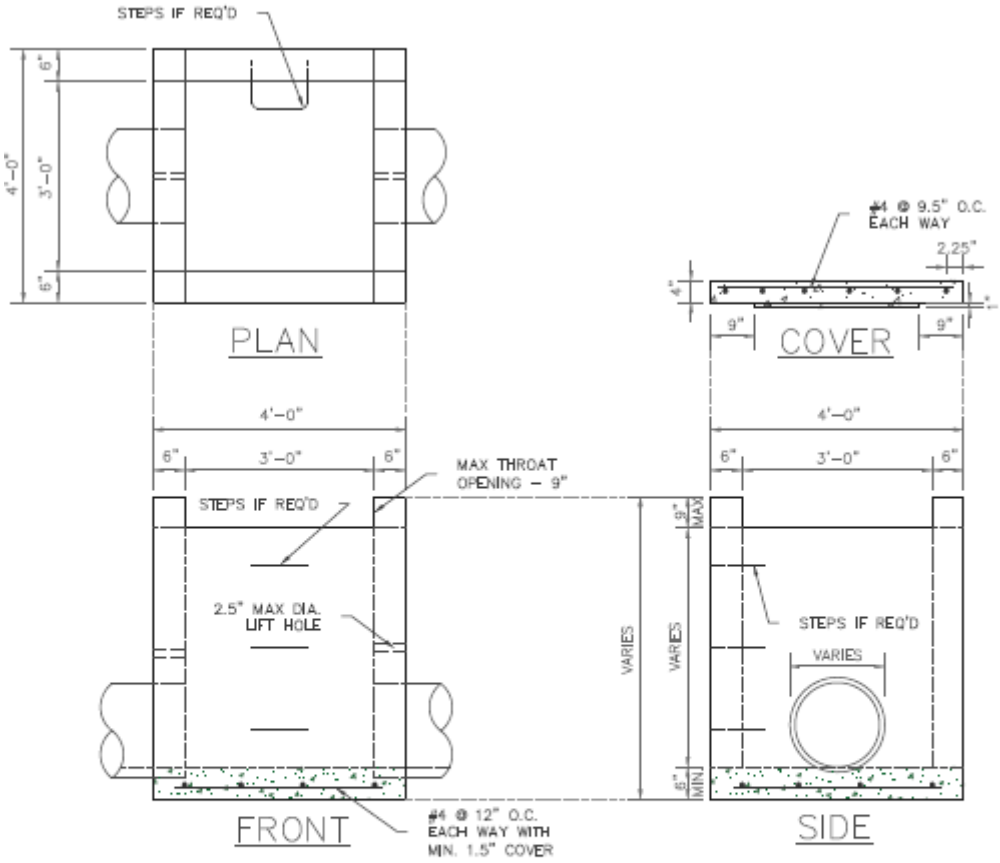

NOTES:
1. Pre–cast structures acceptable upon review. Any structure which may be subjected to wheel traffic must be designed to withstand HB–20 loading.
2. Catch basins deeper than 4.5 feet must be constructed with steps. The depth of the catch basin shall be measured from the point of access for maintenance.

STANDARD CATCH BASIN

TYPE 9 WITH SIDEWALK

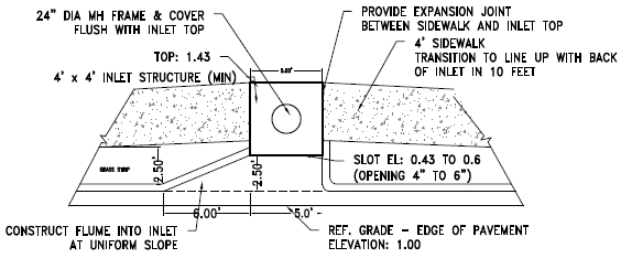

TYPE 9 INLET (RUN LOCATION)
NOT TO SCALE

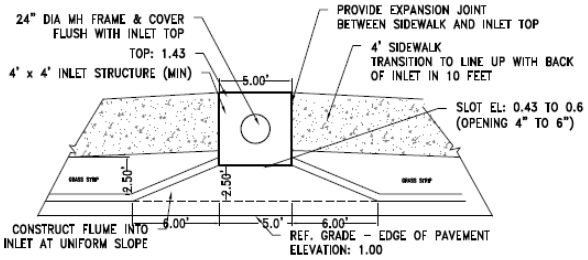

TYPE 9 INLET (SAG LOCATION)
NOT TO SCALE

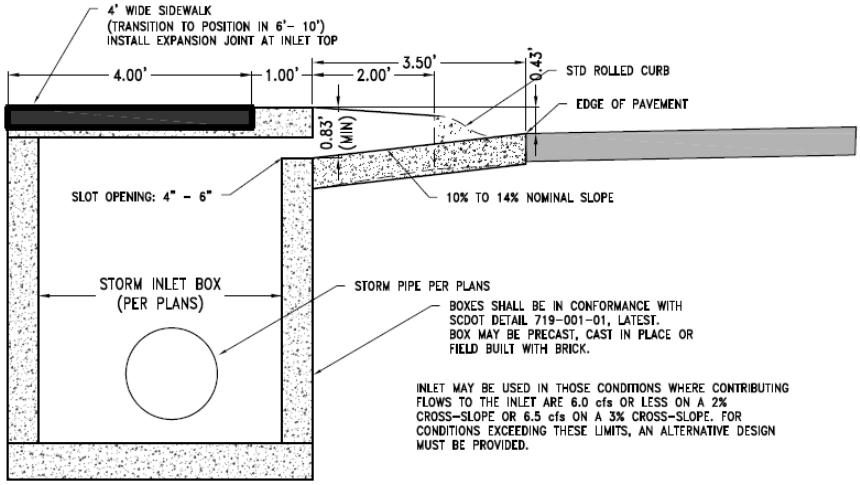

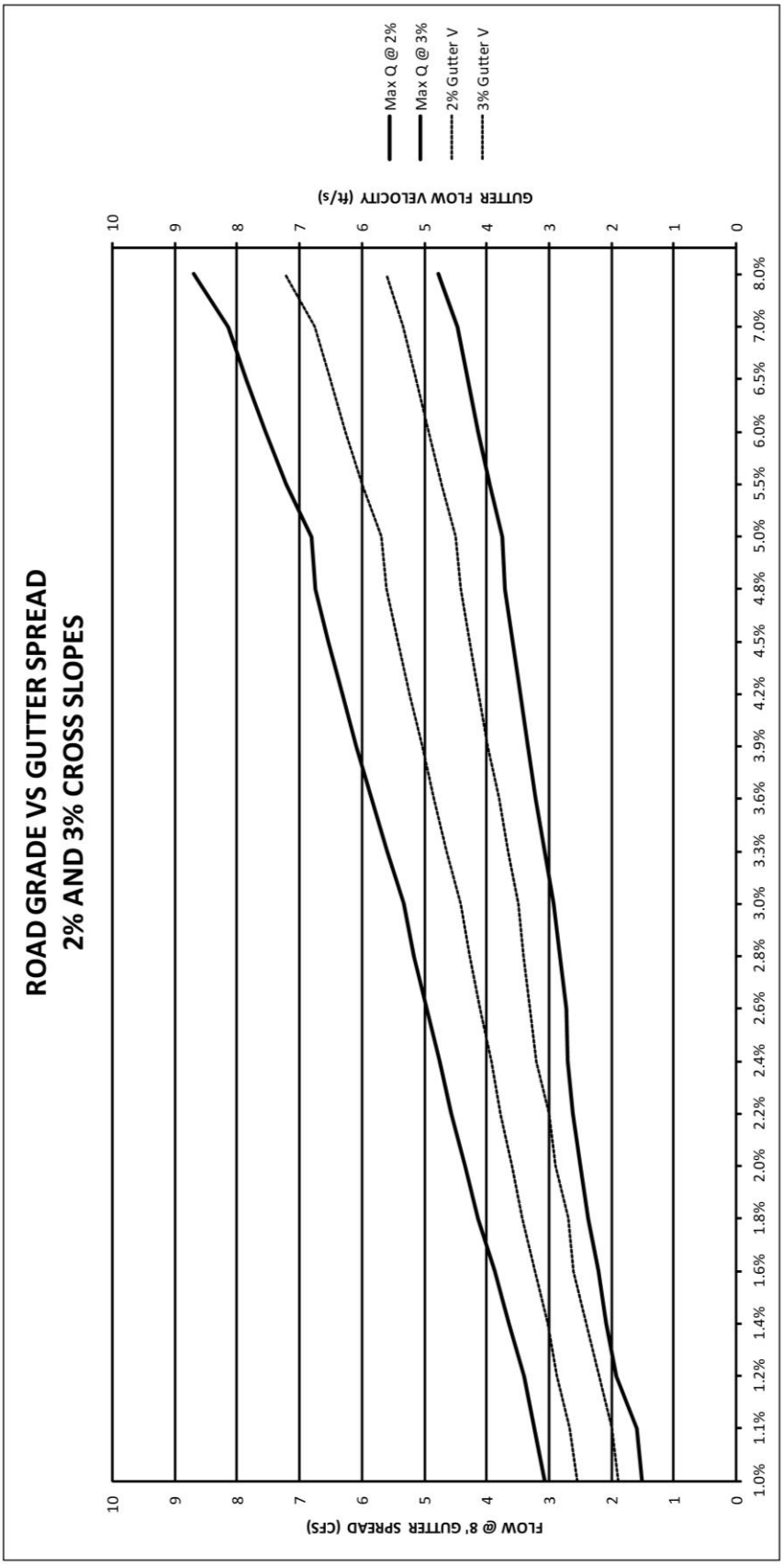
ROAD GRADE VS GUTTER SPREAD
2% AND 3% CROSS SLOPES
FLOW @ 8' GUTTER SPREAD (CFS)
GUTTER FLOW VELOCITY (ft/s)
Max Q @ 2%
Max Q @ 3%
2% Gutter V
3% Gutter V
0
1
2
3
4
5
6
7
8
9
10
1.0%
1.1%
1.2%
1.4%
1.6%
1.8%
2.0%
2.2%
2.4%
2.6%
2.8%
3.0%
3.3%
3.6%
3.9%
4.2%
4.5%
4.8%
5.0%
5.5%
6.0%
6.5%
7.0%
8.0%

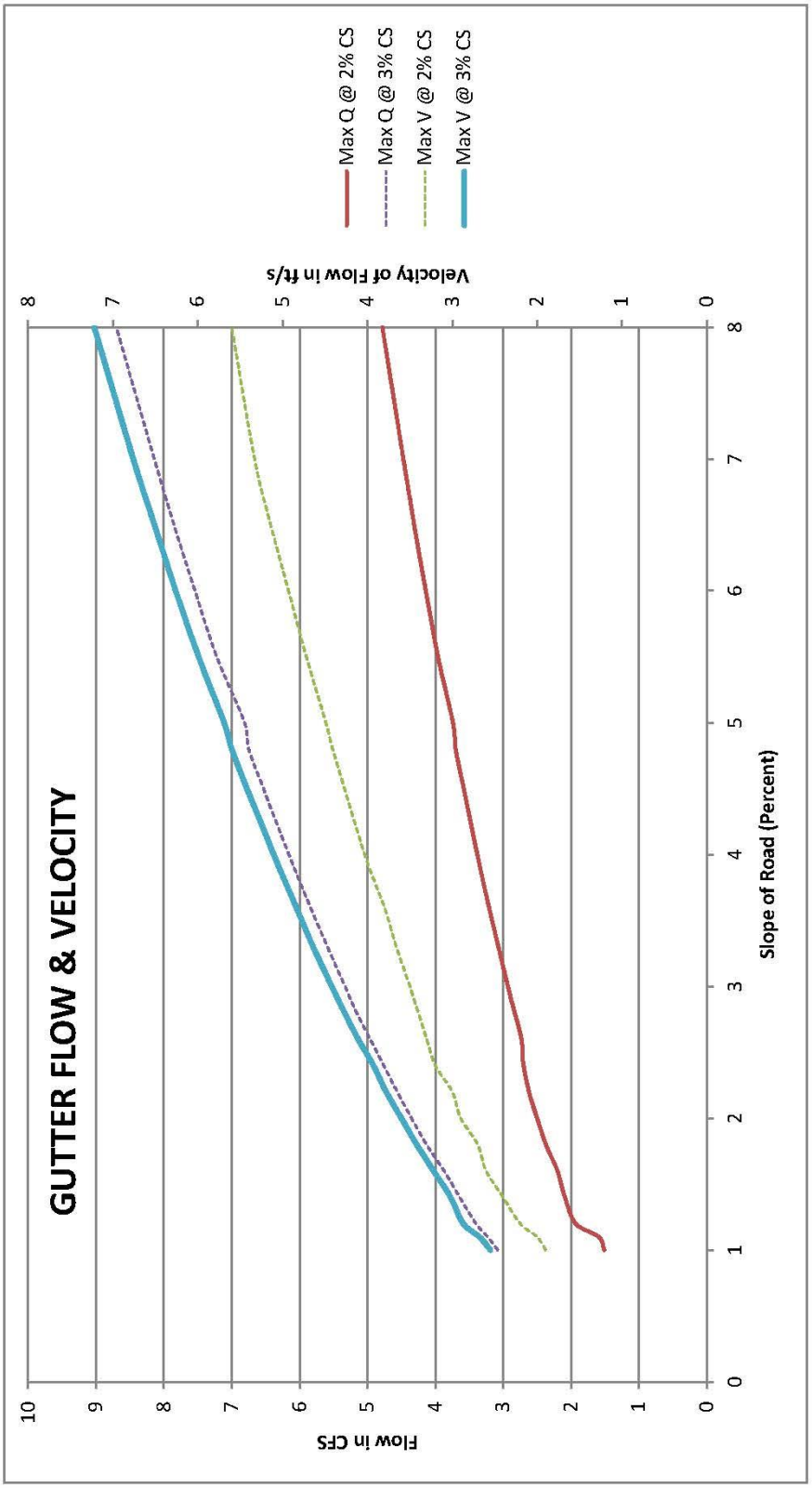
GUTTER FLOW & VELOCITY
Flow in CFS
Velocity of Flow in ft/s
Slope of Road (Percent)
Max Q @ 2% CS
Max Q @ 3% CS
Max V @ 2% CS
Max V @ 3% CS
0
1
2
3
4
5
6
7
8
9
10

TYPE 16

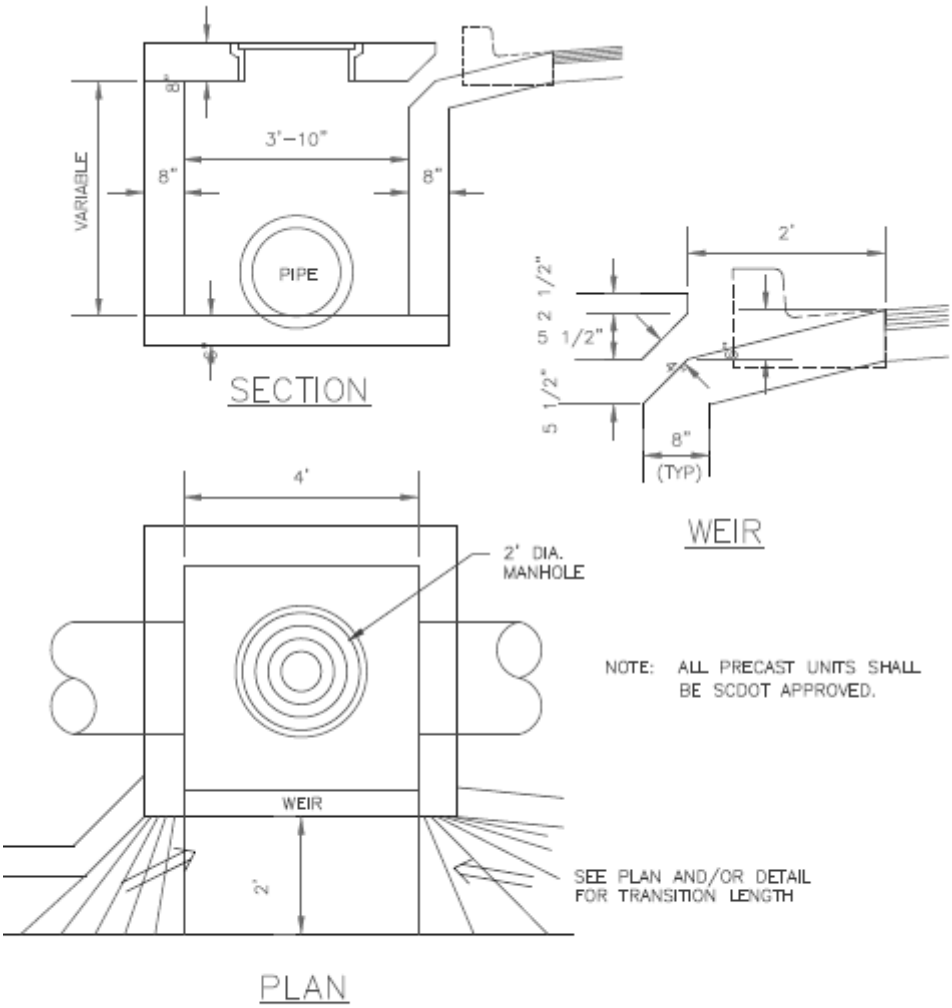

TYPE 16 CATCH BASIN

N.T.S

TYPE 17

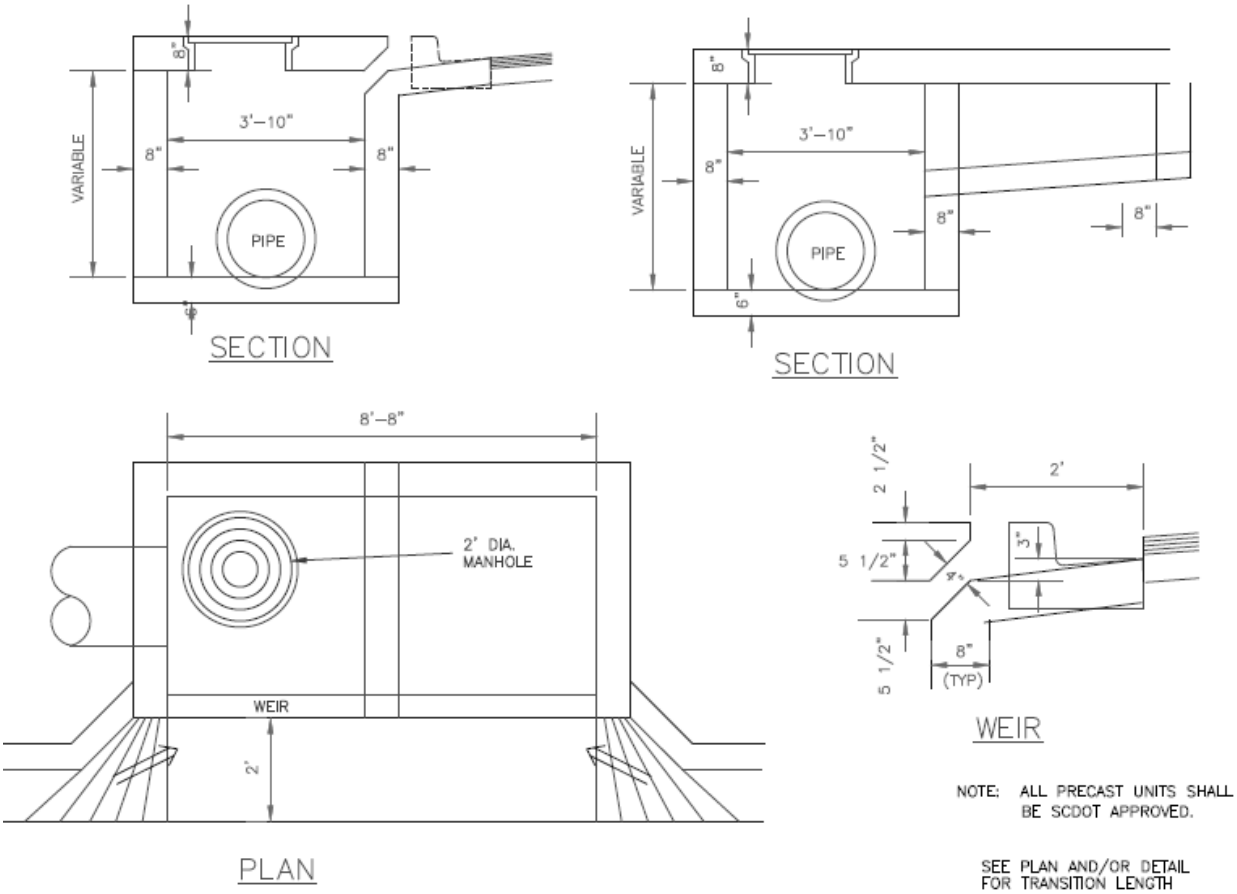

TYPE 17 CATCH BASIN

N.T.S

TYPE 18

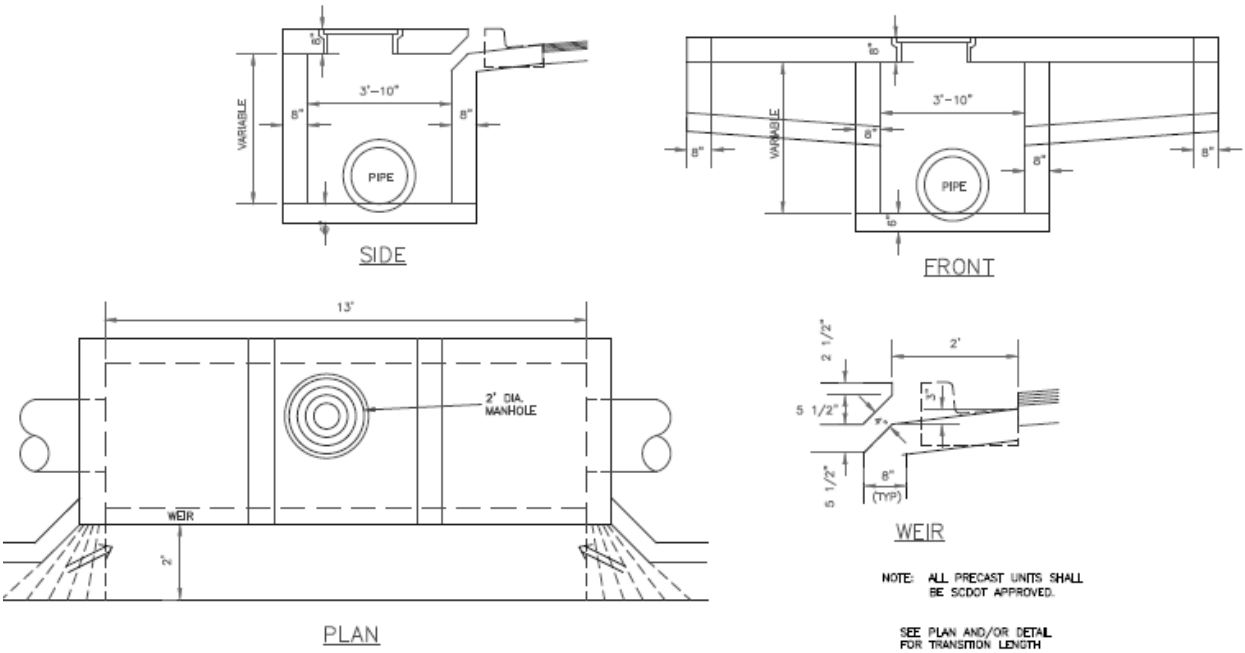

TYPE 18 CATCH BASIN
N.T.S

CONCRETE CURB DETAILS

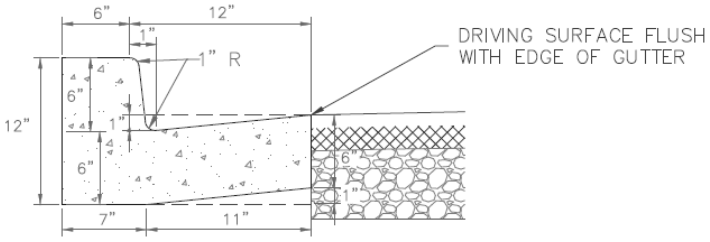

STANDARD CURB AND GUTTER

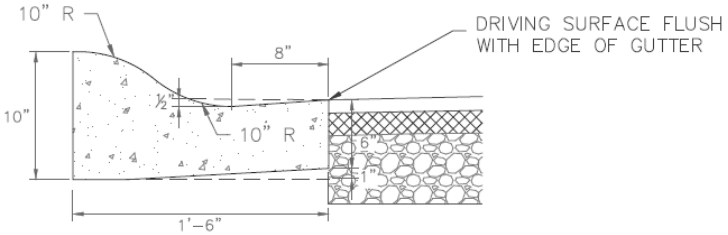

ROLLED CURBING

CONCRETE CURB DETAILS
N.T.S

ROAD CROSS-SECTIONS

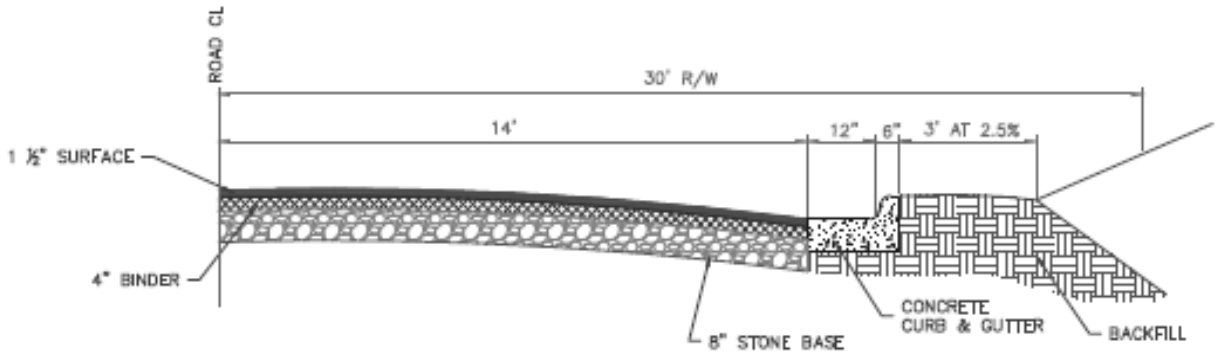

INDUSTRIAL/COMMERCIAL STANDARD
N.T.S

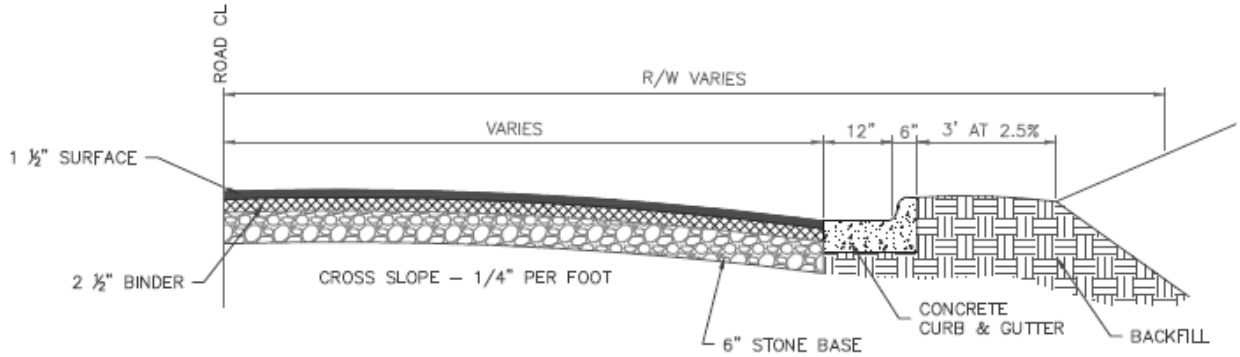

URBAN STANDARD
N.T.S

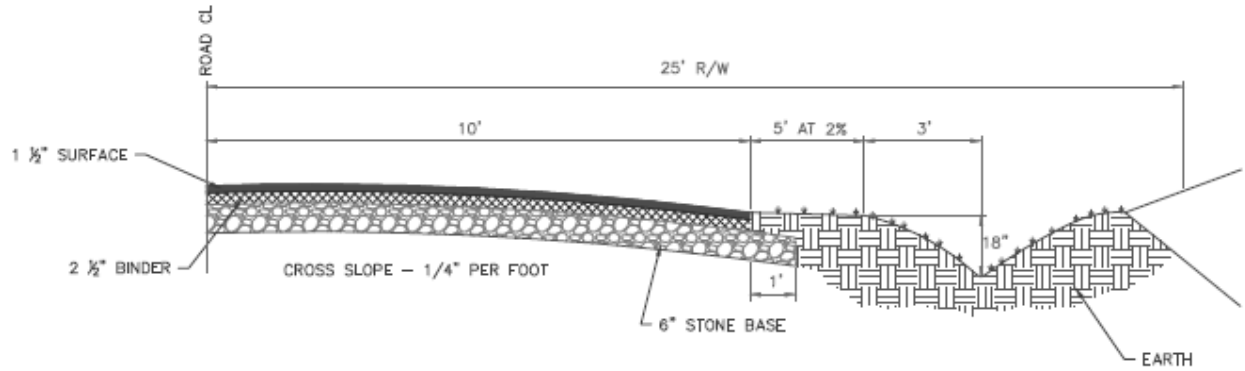

RURAL STANDARD
N.T.S

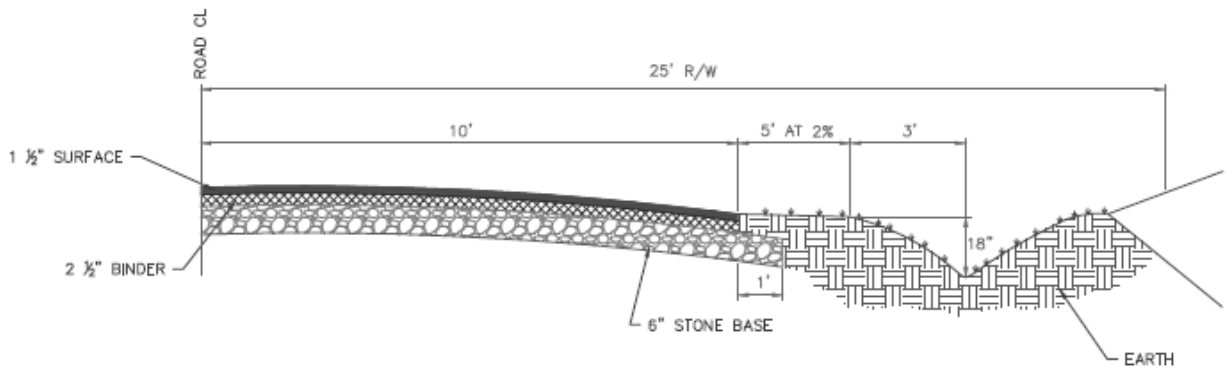

RURAL STANDARD
N.T.S

24" CURB DETAIL

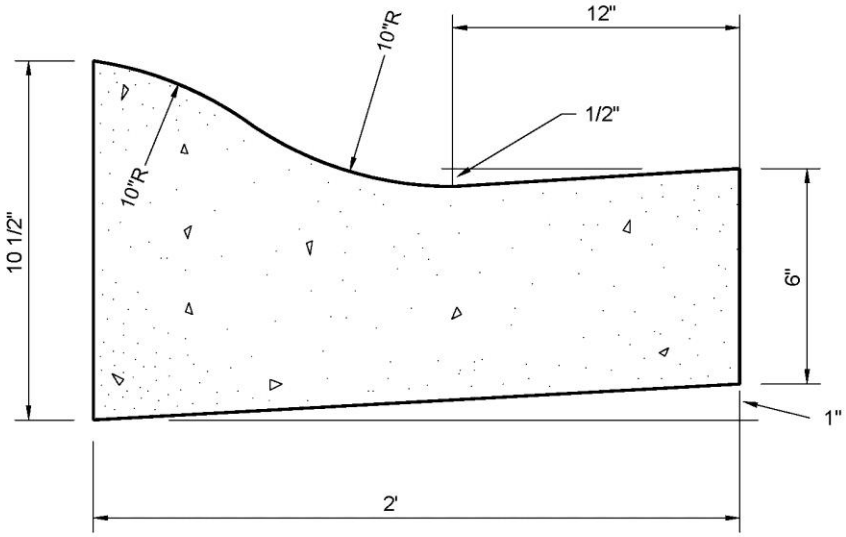

CONCRETE CURB AND GUTTER
(2' OGEE)
(N.T.S.)

ISLAND UNDERDRAIN PLAN VIEW DETAIL

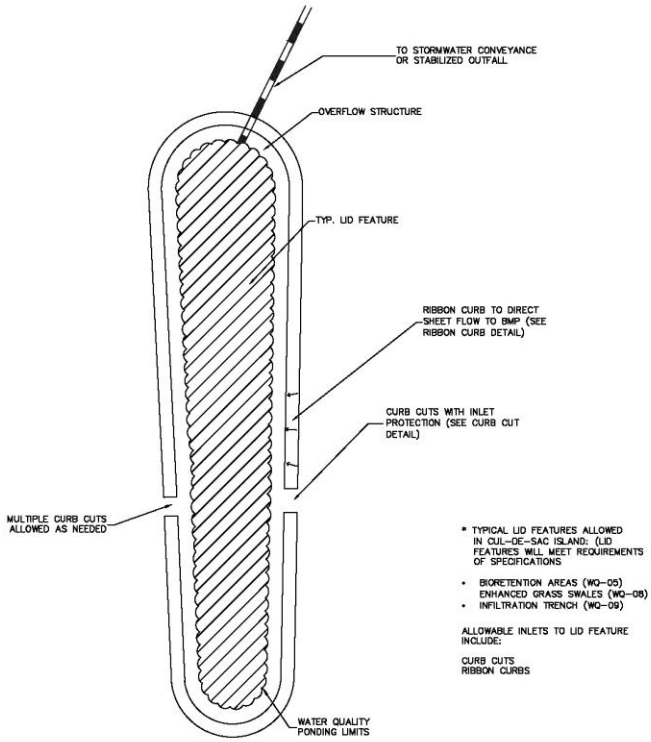

SUBSURFACE DRAINAGE DETAIL

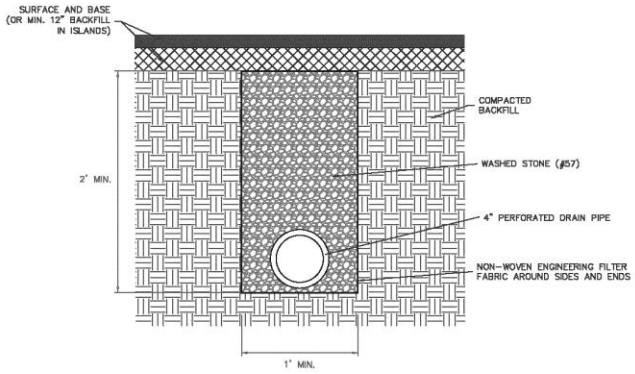

SUBSURFACE DRAINAGE DETAIL

APPENDIX G. DENSITY BONUS FOR LOW IMPACT DEVELOPMENT PROGRAM (STORMWATER BANKING PROGRAM)

Program Overview

The Density Bonus for Low Impact Development Program is a voluntary program that offers developers the ability to increase density in residential developments located within Single Family Zoning Districts.

Basic Steps:

1. Developer determines eligibility for and decides to participate in the program. Developer applies to Zoning Administrator to utilize the Incentive Program.
2. The request is placed on County Council's next Zoning Public Hearing. The application shall then be acted on and reported out by the Planning & Development Committee at its next regular meeting.
3. The application is then forwarded to County Council who shall take final action on the application at its next meeting.
4. If approved, the developer receives a residential density bonus.
5. The developer will then follow the Land Development Regulations regarding preliminary plan approval.
6. Staff will verify the regional and neighborhood DMT attained points to ensure compliance.

Eligibility Requirements:

1. Develop within the Program Area (See: Map)
2. Use the Decision Making Tool and attain minimum score of 70.
3. Pay a participation fee (fee based in part upon the score attained).
4. Provide at least two public access roads to the subdivision. Note: If specific site conditions, such as very little road frontage, do not permit two public access roads, a developer may request permission for eligibility without meeting this requirement.
5. Any development that was previously denied a re-zoning request by Council or withdrew a re-zoning request is ineligible for participation in the Program for one year from the date of the Council decision or withdrawal.

Infrastructure capacity issues will likely exist within portions of the Program Area. The developer will be responsible for coordination with the appropriate infrastructure providers to determine current capacity and potential upgrades of the system. Funding for these upgrades is not provided by the Program and is typically the responsibility of the developer.

In exchange for participation in the program, developers will receive a residential density bonus which will allow the development more lots on the site than would be allowed by the site's current zoning. For developments participating in the program the following provisions will apply:

1. There will be no required minimum lot area per dwelling unit unless otherwise required by SCDHEC.
2. There is no minimum lot width, except as required by SCDHEC and/or the International Building Code.
3. No structures shall be erected within five feet from any external lot line of any program approved development; otherwise, no front, side, or rear setbacks are required for internal lots, except as required by International Building Code, and the Greenville County Encroachment and Transportation Corridor Preservation Ordinances. Note: Utility easements and rights of way are still required specific to utility provider.

4. The permitted uses will include Single Family Attached and Detached.

The participation fee paid by developers will be directed to a restricted fund that will be used to implement strategic stormwater retrofit projects that will benefit overall water quality in the County.